EJM SERIES

An excellent choice for customers looking for a highly flexible, yet value-priced servo rated gearbox without sacrificing performance or durability. The EJM series comes in six different frame sizes to meet a wide range of application requirements and can support servo motors with up to 7.5kW capacity. Solid, hollow and double extended output shaft options allow for flexible machine design. The all-aluminum housing construction offers weight savings of up to 30% with improved thermal horsepower over cast iron.

The EJM series comes vent free and lubricated for life with synthetic oil, making it a reliable, maintenance-free solution. This product is ideally suited for applications within the packaging, material handling and general automation markets.

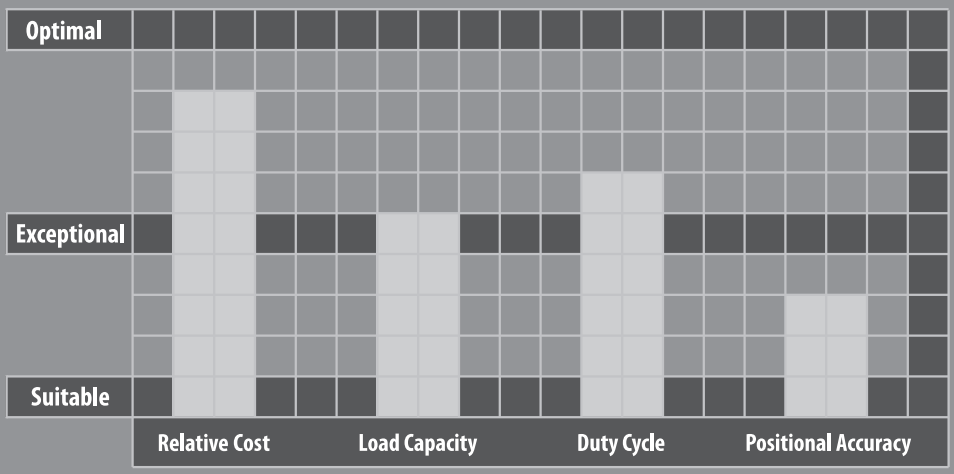

EJM SERIES

- Value engineered solution for less demanding servo applications
- Lightweight aluminum housing offers weight savings combined with improved thermal horsepower over cast iron
- Maintenance free solution; vent free and lubricated for life with synthetic oil
- Rated torque up to 614 Nm (up to 7.5 kw servo motor capacity)

EJM Series Features

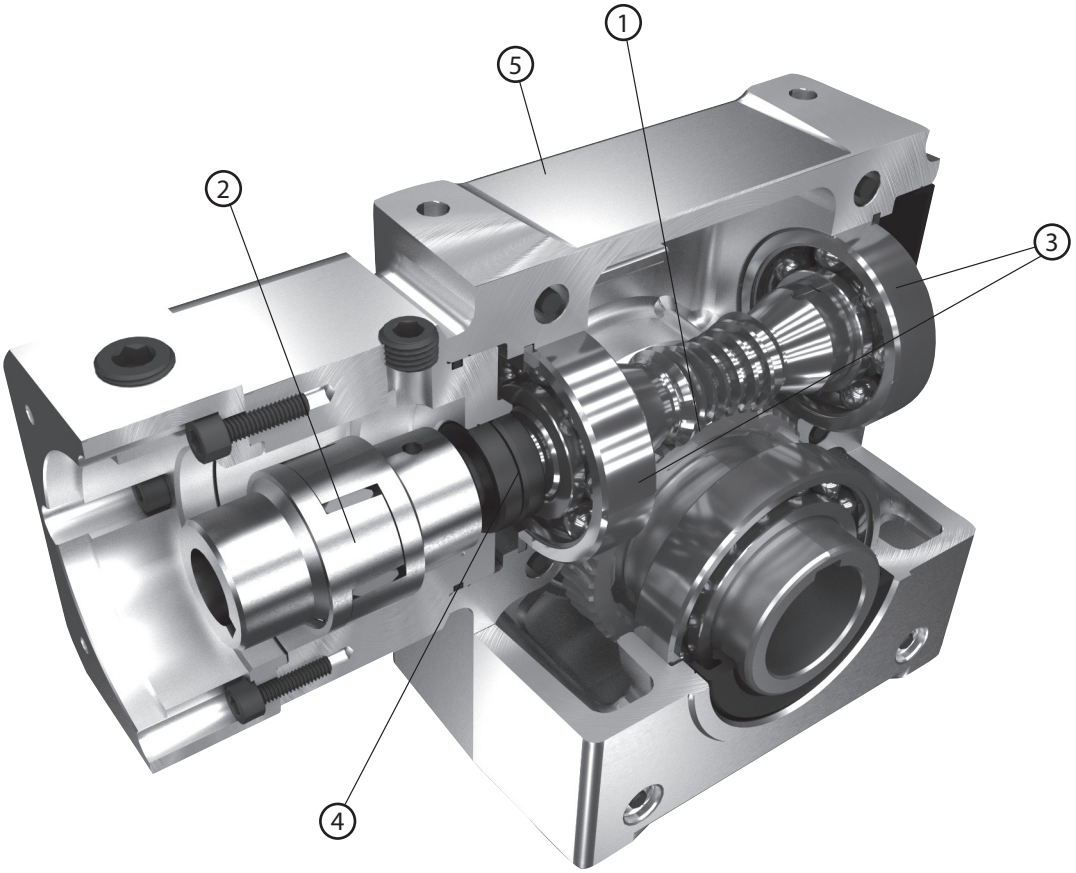

1. Globoidal gear set – between 3-8 teeth in contact at once, allowing 300% shock load capacity
2. Integrated zero backlash coupling provides fast, error free alignment
3. Ball bearings help reduce friction and heat, as compared to tapered roller designs
4. Double oil seal and o-ring provide IP65 protection
5. Thermally efficient, lightweight aluminum housing

EJM Series Model Code

EJM	–	030	–	25	–	H0	0	–	MGKJ24

- MGKJ24: *Motor mounting code
- 0: Backlash: 0: Standard Backlash
- H0: Output mounting type:
  - H0: Keyed Hollow Shaft
  - SR: Keyed Solid Shaft Right
  - SL: Keyed Solid Shaft Left
  - SW: Keyed Dual Solid Shaft
- 25: Ratio: 5, 7.5, 10, 15, 20, 25, 30, 40, 50, 60
- 030: Frame size: 002, 003, 005, 006, 009, 011
- EJM: Series

* Motor mounting code varies depending on the motor. Contact us to configure the code.

EJM 002 1-Stage Specifications

Frame Size	**002**						
Ratio	Unit	Note	5	7.5	10	15	20
Nominal Output Torque	[Nm]	--	29	32	33	35	35
Maximum Acceleration Torque	[Nm]	--	38	40	33	42	43
Emergency Stop Torque	[Nm]	--	58	64	66	70	70
No Load Running Torque	[Nm]	*1	0.51				
Nominal Input Speed	[rpm]	--	2,000				
Maximum Continuous Input Speed	[rpm]	--	3,000				
Maximum Cyclic Input Speed	[rpm]	--	4,000				
Maximum Radial Load	[N]	*2	1,780				
Maximum Axial Load	[N]	*3	1,330				
Moment of Inertia	[kgcm2]	--	0.36	0.33	0.32	0.31	0.31
Efficiency	[%]	*4	87	86	82	77	72
Torsional Rigidity	[Nm/arcmin]	--	1.0				
Maximum Torsional Backlash	[Arc-min]	--	≤ 41				
Noise Level	dB [A]	*5	≤ 73				
Ambient Temperature	[°C]	--	-25 ~ 93				
Permitted Housing Temperature	[°C]	--	100				
Protection Class	--	--	IP55				
Lubrication	--	--	Synthetic Oil				
Service Life	[Hours]	--	25,000				
Weight	[kg]	*6	3.2				

*1) Torque at no load applied to the input shaft at 2,000 rpm

*2) The maximum radial load the gearbox can accept

*3) The maximum axial load the gearbox can accept

*4) The efficiency at the nominal output torque rating

*5) Measured with no load applied to the input shaft at 2,000 rpm

*6) Weight may vary slightly between models

EJM 002 1-Stage Specifications

Frame Size	**002**						
Ratio	Unit	Note	25	30	40	50	60
Nominal Output Torque	[Nm]	--	39	36	33	32	30
Maximum Acceleration Torque	[Nm]	--	48	45	39	38	36
Emergency Stop Torque	[Nm]	--	78	72	66	64	60
No Load Running Torque	[Nm]	*1	0.51				
Nominal Input Speed	[rpm]	--	2,000				
Maximum Continuous Input Speed	[rpm]	--	3,000				
Maximum Cyclic Input Speed	[rpm]	--	4,000				
Maximum Radial Load	[N]	*2	1,780				
Maximum Axial Load	[N]	*3	1,330				
Moment of Inertia	[kgcm2]	--	0.30	0.30	0.30	0.30	0.30
Efficiency	[%]	*4	68	65	56	50	44
Torsional Rigidity	[Nm/arcmin]	--	1.0				
Maximum Torsional Backlash	[Arc-min]	--	≤ 41				
Noise Level	dB [A]	*5	≤ 73				
Ambient Temperature	[°C]	--	-25 ~ 93				
Permitted Housing Temperature	[°C]	--	100				
Protection Class	--	--	IP55				
Lubrication	--	--	Synthetic Oil				
Service Life	[Hours]	--	25,000				
Weight	[kg]	*6	3.2				

*1) Torque at no load applied to the input shaft at 2,000 rpm

*2) The maximum radial load the gearbox can accept

*3) The maximum axial load the gearbox can accept

*4) The efficiency at the nominal output torque rating

*5) Measured with no load applied to the input shaft at 2,000 rpm

*6) Weight may vary slightly between models

EJM 003 1-Stage Specifications

Frame Size	**003**						
Ratio	Unit	Note	5	7.5	10	15	20
Nominal Output Torque	[Nm]	--	43	47	48	52	52
Maximum Acceleration Torque	[Nm]	--	56	59	51	61	63
Emergency Stop Torque	[Nm]	--	86	94	96	104	104
No Load Running Torque	[Nm]	*1	0.51				
Nominal Input Speed	[rpm]	--	2,000				
Maximum Continuous Input Speed	[rpm]	--	3,000				
Maximum Cyclic Input Speed	[rpm]	--	4,000				
Maximum Radial Load	[N]	*2	2,110				
Maximum Axial Load	[N]	*3	1,770				
Moment of Inertia	[kgcm2]	--	0.75	0.64	0.61	0.58	0.57
Efficiency	[%]	*4	88	86	84	80	75
Torsional Rigidity	[Nm/arcmin]	--	1.9				
Maximum Torsional Backlash	[Arc-min]	--	≤ 30				
Noise Level	dB [A]	*5	≤ 75				
Ambient Temperature	[°C]	--	-25 ~ 93				
Permitted Housing Temperature	[°C]	--	100				
Protection Class	--	--	IP55				
Lubrication	--	--	Synthetic Oil				
Service Life	[Hours]	--	25,000				
Weight	[kg]	*6	5.4				

*1) Torque at no load applied to the input shaft at 2,000 rpm

*2) The maximum radial load the gearbox can accept

*3) The maximum axial load the gearbox can accept

*4) The efficiency at the nominal output torque rating

*5) Measured with no load applied to the input shaft at 2,000 rpm

*6) Weight may vary slightly between models

EJM 003 1-Stage Specifications

Frame Size	**003**						
Ratio	Unit	Note	25	30	40	50	60
Nominal Output Torque	[Nm]	--	55	54	48	47	44
Maximum Acceleration Torque	[Nm]	--	67	65	58	57	53
Emergency Stop Torque	[Nm]	--	110	108	96	94	88
No Load Running Torque	[Nm]	*1	0.51				
Nominal Input Speed	[rpm]	--	2,000				
Maximum Continuous Input Speed	[rpm]	--	3,000				
Maximum Cyclic Input Speed	[rpm]	--	4,000				
Maximum Radial Load	[N]	*2	2,110				
Maximum Axial Load	[N]	*3	1,770				
Moment of Inertia	[kgcm2]	--	0.57	0.56	0.56	0.56	0.56
Efficiency	[%]	*4	71	68	60	54	48
Torsional Rigidity	[Nm/arcmin]	--	1.9				
Maximum Torsional Backlash	[Arc-min]	--	≤ 30				
Noise Level	dB [A]	*5	≤ 75				
Ambient Temperature	[°C]	--	-25 ~ 93				
Permitted Housing Temperature	[°C]	--	100				
Protection Class	--	--	IP55				
Lubrication	--	--	Synthetic Oil				
Service Life	[Hours]	--	25,000				
Weight	[kg]	*6	5.4				

*1) Torque at no load applied to the input shaft at 2,000 rpm

*2) The maximum radial load the gearbox can accept

*3) The maximum axial load the gearbox can accept

*4) The efficiency at the nominal output torque rating

*5) Measured with no load applied to the input shaft at 2,000 rpm

*6) Weight may vary slightly between models

EJM 005 1-Stage Specifications

Frame Size	**005**						
Ratio	Unit	Note	5	7.5	10	15	20
Nominal Output Torque	[Nm]	--	81	88	90	100	101
Maximum Acceleration Torque	[Nm]	--	105	112	100	120	123
Emergency Stop Torque	[Nm]	--	162	176	180	200	202
No Load Running Torque	[Nm]	*1	1.61				
Nominal Input Speed	[rpm]	--	2,000				
Maximum Continuous Input Speed	[rpm]	--	3,000				
Maximum Cyclic Input Speed	[rpm]	--	4,000				
Maximum Radial Load	[N]	*2	4,330				
Maximum Axial Load	[N]	*3	3,110				
Moment of Inertia	[kgcm2]	--	1.83	1.55	1.45	1.39	1.36
Efficiency	[%]	*4	91	89	87	84	80
Torsional Rigidity	[Nm/arcmin]	--	3.1				
Maximum Torsional Backlash	[Arc-min]	--	≤ 23				
Noise Level	dB [A]	*5	≤ 80				
Ambient Temperature	[°C]	--	-25 ~ 93				
Permitted Housing Temperature	[°C]	--	100				
Protection Class	--	--	IP55				
Lubrication	--	--	Synthetic Oil				
Service Life	[Hours]	--	25,000				
Weight	[kg]	*6	7.3				

*1) Torque at no load applied to the input shaft at 2,000 rpm

*2) The maximum radial load the gearbox can accept

*3) The maximum axial load the gearbox can accept

*4) The efficiency at the nominal output torque rating

*5) Measured with no load applied to the input shaft at 2,000 rpm

*6) Weight may vary slightly between models

EJM 005 1-Stage Specifications

Frame Size	**005**						
Ratio	Unit	Note	25	30	40	50	60
Nominal Output Torque	[Nm]	--	109	105	94	91	85
Maximum Acceleration Torque	[Nm]	--	132	127	114	109	102
Emergency Stop Torque	[Nm]	--	218	210	188	182	170
No Load Running Torque	[Nm]	*1	1.61				
Nominal Input Speed	[rpm]	--	2,000				
Maximum Continuous Input Speed	[rpm]	--	3,000				
Maximum Cyclic Input Speed	[rpm]	--	4,000				
Maximum Radial Load	[N]	*2	4,330				
Maximum Axial Load	[N]	*3	3,110				
Moment of Inertia	[kgcm2]	--	1.35	1.34	1.34	1.33	1.33
Efficiency	[%]	*4	77	74	67	62	56
Torsional Rigidity	[Nm/arcmin]	--	3.1				
Maximum Torsional Backlash	[Arc-min]	--	≤ 23				
Noise Level	dB [A]	*5	≤ 80				
Ambient Temperature	[°C]	--	-25 ~ 93				
Permitted Housing Temperature	[°C]	--	100				
Protection Class	--	--	IP55				
Lubrication	--	--	Synthetic Oil				
Service Life	[Hours]	--	25,000				
Weight	[kg]	*6	7.3				

*1) Torque at no load applied to the input shaft at 2,000 rpm

*2) The maximum radial load the gearbox can accept

*3) The maximum axial load the gearbox can accept

*4) The efficiency at the nominal output torque rating

*5) Measured with no load applied to the input shaft at 2,000 rpm

*6) Weight may vary slightly between models

EJM 006 1-Stage Specifications

Frame Size	**006**						
Ratio	Unit	Note	5	7.5	10	15	20
Nominal Output Torque	[Nm]	--	133	144	145	165	168
Maximum Acceleration Torque	[Nm]	--	172	183	154	186	207
Emergency Stop Torque	[Nm]	--	266	288	290	330	336
No Load Running Torque	[Nm]	*1	2.72				
Nominal Input Speed	[rpm]	--	2,000				
Maximum Continuous Input Speed	[rpm]	--	3,000				
Maximum Cyclic Input Speed	[rpm]	--	4,000				
Maximum Radial Load	[N]	*2	4,890				
Maximum Axial Load	[N]	*3	3,550				
Moment of Inertia	[kgcm2]	--	2.61	2.02	1.81	1.66	1.61
Efficiency	[%]	*4	92	91	89	87	83
Torsional Rigidity	[Nm/arcmin]	--	5.6				
Maximum Torsional Backlash	[Arc-min]	--	≤ 20				
Noise Level	dB [A]	*5	≤ 80				
Ambient Temperature	[°C]	--	-25 ~ 93				
Permitted Housing Temperature	[°C]	--	100				
Protection Class	--	--	IP55				
Lubrication	--	--	Synthetic Oil				
Service Life	[Hours]	--	25,000				
Weight	[kg]	*6	10				

*1) Torque at no load applied to the input shaft at 2,000 rpm

*2) The maximum radial load the gearbox can accept

*3) The maximum axial load the gearbox can accept

*4) The efficiency at the nominal output torque rating

*5) Measured with no load applied to the input shaft at 2,000 rpm

*6) Weight may vary slightly between models

EJM 006 1-Stage Specifications

Frame Size	**006**						
Ratio	Unit	Note	25	30	40	50	60
Nominal Output Torque	[Nm]	--	183	175	158	150	142
Maximum Acceleration Torque	[Nm]	--	223	212	191	181	170
Emergency Stop Torque	[Nm]	--	366	350	316	300	284
No Load Running Torque	[Nm]	*1	2.72				
Nominal Input Speed	[rpm]	--	2,000				
Maximum Continuous Input Speed	[rpm]	--	3,000				
Maximum Cyclic Input Speed	[rpm]	--	4,000				
Maximum Radial Load	[N]	*2	4,890				
Maximum Axial Load	[N]	*3	3,550				
Moment of Inertia	[kgcm2]	--	1.58	1.57	1.56	1.55	1.55
Efficiency	[%]	*4	80	78	72	66	62
Torsional Rigidity	[Nm/arcmin]	--	5.6				
Maximum Torsional Backlash	[Arc-min]	--	≤ 20				
Noise Level	dB [A]	*5	≤ 80				
Ambient Temperature	[°C]	--	-25 ~ 93				
Permitted Housing Temperature	[°C]	--	100				
Protection Class	--	--	IP55				
Lubrication	--	--	Synthetic Oil				
Service Life	[Hours]	--	25,000				
Weight	[kg]	*6	10				

*1) Torque at no load applied to the input shaft at 2,000 rpm

*2) The maximum radial load the gearbox can accept

*3) The maximum axial load the gearbox can accept

*4) The efficiency at the nominal output torque rating

*5) Measured with no load applied to the input shaft at 2,000 rpm

*6) Weight may vary slightly between models

EJM 009 1-Stage Specifications

Frame Size	**009**						
Ratio	Unit	Note	5	7.5	10	15	20
Nominal Output Torque	[Nm]	--	245	262	259	305	314
Maximum Acceleration Torque	[Nm]	--	317	333	259	312	386
Emergency Stop Torque	[Nm]	--	490	524	518	610	628
No Load Running Torque	[Nm]	*1	4.80				
Nominal Input Speed	[rpm]	--	2,000				
Maximum Continuous Input Speed	[rpm]	--	2,000				
Maximum Cyclic Input Speed	[rpm]	--	3,000				
Maximum Radial Load	[N]	*2	6,890				
Maximum Axial Load	[N]	*3	4,890				
Moment of Inertia	[kgcm2]	--	12.4	10.5	9.87	9.40	9.24
Efficiency	[%]	*4	93	92	91	89	86
Torsional Rigidity	[Nm/arcmin]	--	15.5				
Maximum Torsional Backlash	[Arc-min]	--	≤ 15				
Noise Level	dB [A]	*5	≤ 83				
Ambient Temperature	[°C]	--	-25 ~ 93				
Permitted Housing Temperature	[°C]	--	100				
Protection Class	--	--	IP55				
Lubrication	--	--	Synthetic Oil				
Service Life	[Hours]	--	25,000				
Weight	[kg]	*6	20				

*1) Torque at no load applied to the input shaft at 2,000 rpm

*2) The maximum radial load the gearbox can accept

*3) The maximum axial load the gearbox can accept

*4) The efficiency at the nominal output torque rating

*5) Measured with no load applied to the input shaft at 2,000 rpm

*6) Weight may vary slightly between models

EJM 009 1-Stage Specifications

Frame Size	009						
Ratio	Unit	Note	25	30	40	50	60
Nominal Output Torque	[Nm]	--	308	327	295	278	264
Maximum Acceleration Torque	[Nm]	--	376	369	356	335	317
Emergency Stop Torque	[Nm]	--	616	654	590	556	528
No Load Running Torque	[Nm]	*1	4.80				
Nominal Input Speed	[rpm]	--	2,000				
Maximum Continuous Input Speed	[rpm]	--	2,000				
Maximum Cyclic Input Speed	[rpm]	--	3,000				
Maximum Radial Load	[N]	*2	6,890				
Maximum Axial Load	[N]	*3	4,890				
Moment of Inertia	[kgcm2]	--	9.17	9.12	9.08	9.07	9.06
Efficiency	[%]	*4	83	81	76	71	66
Torsional Rigidity	[Nm/arcmin]	--	15.5				
Maximum Torsional Backlash	[Arc-min]	--	≤ 15				
Noise Level	dB [A]	*5	≤ 83				
Ambient Temperature	[°C]	--	-25 ~ 93				
Permitted Housing Temperature	[°C]	--	100				
Protection Class	--	--	IP55				
Lubrication	--	--	Synthetic Oil				
Service Life	[Hours]	--	25,000				
Weight	[kg]	*6	20				

*1) Torque at no load applied to the input shaft at 2,000 rpm
*2) The maximum radial load the gearbox can accept
*3) The maximum axial load the gearbox can accept
*4) The efficiency at the nominal output torque rating
*5) Measured with no load applied to the input shaft at 2,000 rpm
*6) Weight may vary slightly between models

EJM 011 1-Stage Specifications

Frame Size	**011**						
Ratio	Unit	Note	5	7.5	10	15	20
Nominal Output Torque	[Nm]	--	374	398	395	469	485
Maximum Acceleration Torque	[Nm]	--	486	506	477	577	597
Emergency Stop Torque	[Nm]	--	748	796	790	938	970
No Load Running Torque	[Nm]	*1	5.83				
Nominal Input Speed	[rpm]	--	2,000				
Maximum Continuous Input Speed	[rpm]	--	2,000				
Maximum Cyclic Input Speed	[rpm]	--	3,000				
Maximum Radial Load	[N]	*2	9,780				
Maximum Axial Load	[N]	*3	5,780				
Moment of Inertia	[kgcm2]	--	25.3	19.8	17.9	16.5	16.0
Efficiency	[%]	*4	94	93	92	90	87
Torsional Rigidity	[Nm/arcmin]	--	28.4				
Maximum Torsional Backlash	[Arc-min]	--	≤ 12				
Noise Level	dB [A]	*5	≤ 85				
Ambient Temperature	[°C]	--	-25 ~ 93				
Permitted Housing Temperature	[°C]	--	100				
Protection Class	--	--	IP55				
Lubrication	--	--	Synthetic Oil				
Service Life	[Hours]	--	25,000				
Weight	[kg]	*6	30				

*1) Torque at no load applied to the input shaft at 2,000 rpm

*2) The maximum radial load the gearbox can accept

*3) The maximum axial load the gearbox can accept

*4) The efficiency at the nominal output torque rating

*5) Measured with no load applied to the input shaft at 2,000 rpm

*6) Weight may vary slightly between models

EJM 011 1-Stage Specifications

Frame Size	**011**						
Ratio	Unit	Note	25	30	40	50	60
Nominal Output Torque	[Nm]	--	474	505	455	427	407
Maximum Acceleration Torque	[Nm]	--	580	614	551	514	489
Emergency Stop Torque	[Nm]	--	948	1010	910	854	814
No Load Running Torque	[Nm]	*1	5.83				
Nominal Input Speed	[rpm]	--	2,000				
Maximum Continuous Input Speed	[rpm]	--	2,000				
Maximum Cyclic Input Speed	[rpm]	--	3,000				
Maximum Radial Load	[N]	*2	9,780				
Maximum Axial Load	[N]	*3	5,780				
Moment of Inertia	[kgcm2]	--	15.8	15.7	15.6	15.5	15.5
Efficiency	[%]	*4	84	83	78	73	69
Torsional Rigidity	[Nm/arcmin]	--	28.4				
Maximum Torsional Backlash	[Arc-min]	--	≤ 12				
Noise Level	dB [A]	*5	≤ 85				
Ambient Temperature	[°C]	--	-25 ~ 93				
Permitted Housing Temperature	[°C]	--	100				
Protection Class	--	--	IP55				
Lubrication	--	--	Synthetic Oil				
Service Life	[Hours]	--	25,000				
Weight	[kg]	*6	30				

*1) Torque at no load applied to the input shaft at 2,000 rpm

*2) The maximum radial load the gearbox can accept

*3) The maximum axial load the gearbox can accept

*4) The efficiency at the nominal output torque rating

*5) Measured with no load applied to the input shaft at 2,000 rpm

*6) Weight may vary slightly between models

EJM Dimensions – Hollow Output Shaft

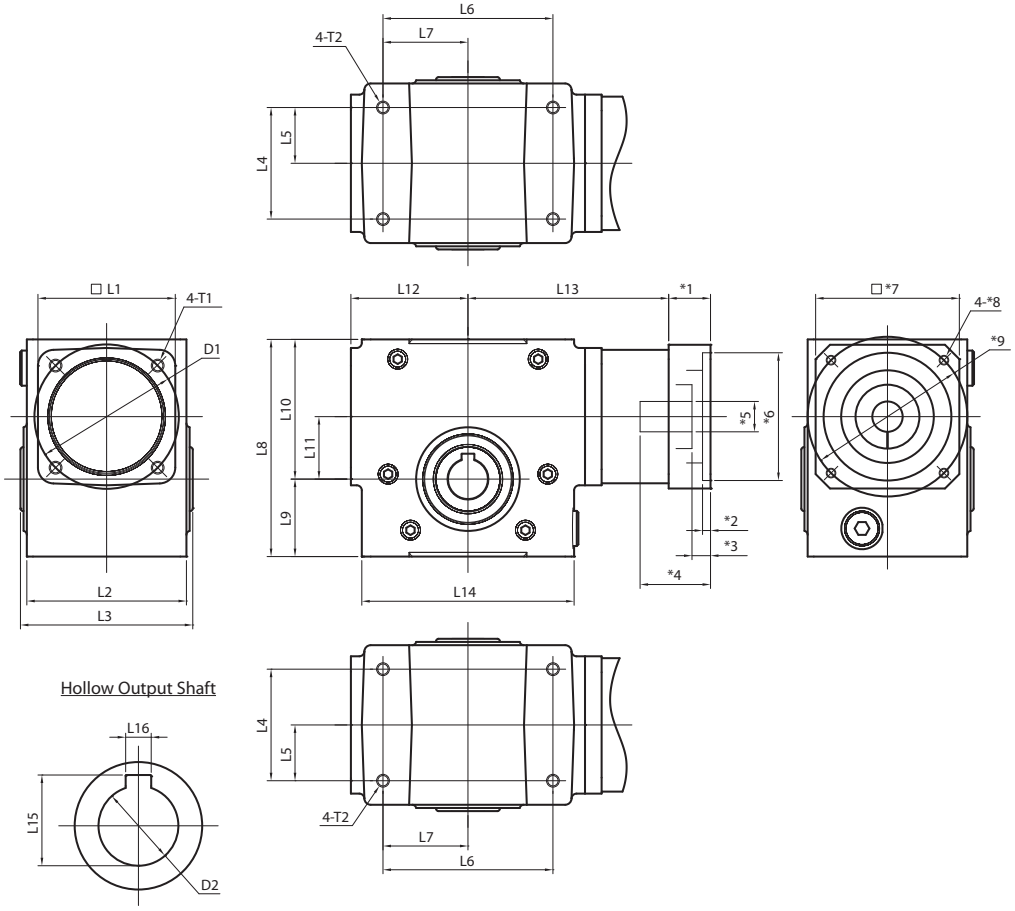

Frame Size	Unit	Note	EJM-002	EJM-003	EJM-005	EJM-006	EJM-009	EJM-011
L1	[mm]	--	60	86	86	86	116	116
L2	[mm]	--	70	100	100	100	130	130
L3	[mm]	--	98	108	107	108	138	169
L4	[mm]	--	51	70	73	73	102	102
L5	[mm]	--	25	35	37	37	51	51
L6	[mm]	--	83	106	127	127	178	191
L7	[mm]	--	41	53	64	64	89	95
L8	[mm]	--	118.5	136	162	176	225.5	250
L9	[mm]	--	43.5	48.5	58	63.5	82.5	86
L10	[mm]	--	75	87.5	104	112.5	143	164
L11	[mm]	--	33.8	39.1	50.0	60.5	76.2	89.9
L12	[mm]	--	67	73	84	95	117	130
L13	[mm]	--	126	126	136	147	184	197
L14	[mm]	--	110	133	152	178	229	241
L15	[mm]	--	23	28.5	38.5	38.5	59.5	80
L16	[mm]	--	6	8	10	10	16	20
D1	[mm]	--	ø64	ø90.5	ø90.5	ø90.5	ø127	ø127
D2 (H7)	[mm]	--	ø20	ø25	ø35	ø35	ø55	ø75
T1	[mm]	--	M8x12	M8x12	M8x12	M8x12	M8x12	M8x12
T2	[mm]	--	M8x12	M8x12	M10x15	M10x15	M12x18	M16x24
***1 ~**	[mm]	*9	Motor attachment dimensions are made to fit your servo motor.					

EJM Dimensions – Solid Output Shaft

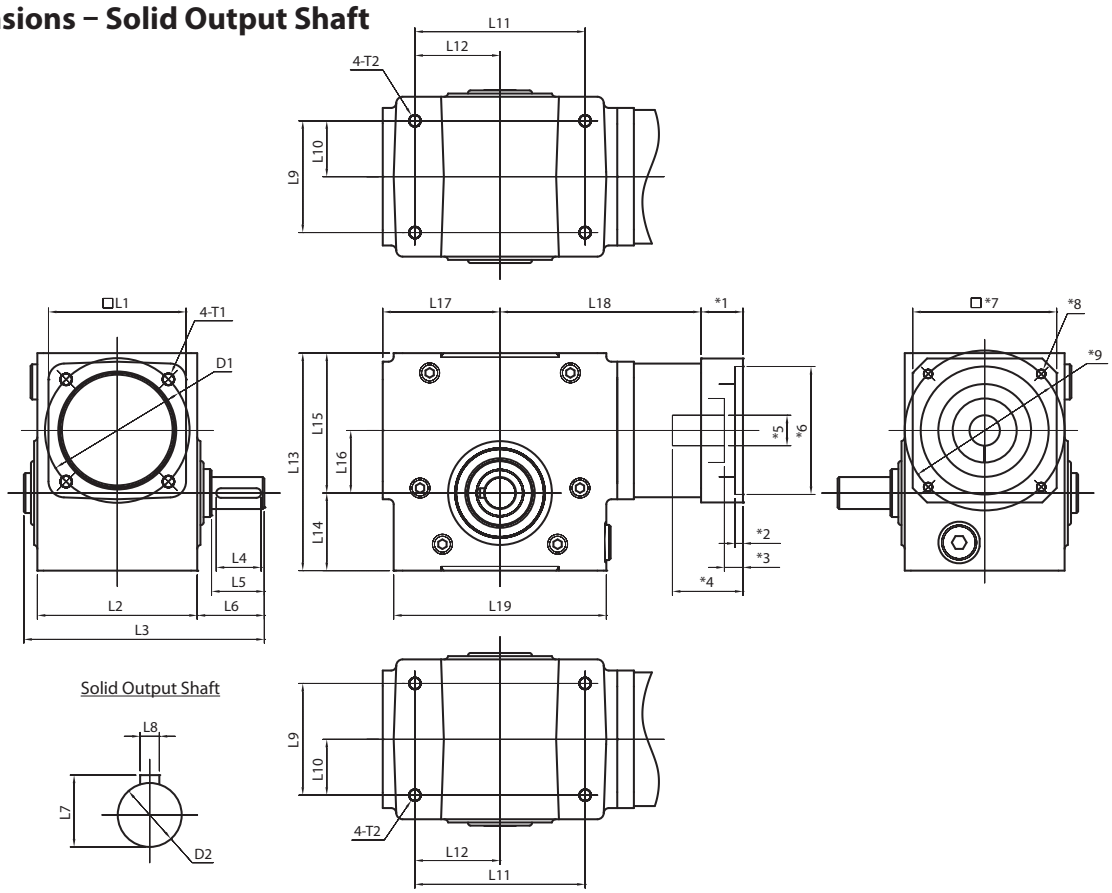

Frame Size	Unit	Note	EJM-002	EJM-003	EJM-005	EJM-006	EJM-009	EJM-011
L1	[mm]	--	60	86	86	86	116	116
L2	[mm]	--	70	100	100	100	130	130
L3	[mm]	--	140.5	150.5	156	173	204	261
L4	[mm]	--	28	28	36	50	50	70
L5	[mm]	--	33	33	39	55	54	79
L6	[mm]	--	52	42	48	64	64	105
L7	[mm]	--	22.5	22.5	28	33	38	45
L8	[mm]	--	6	6	8	8	10	12
L9	[mm]	--	51	70	73	73	102	102
L10	[mm]	--	25.5	35	36.5	36.5	51	51
L11	[mm]	--	83	106	127	127	178	191
L12	[mm]	--	41.5	53	63.5	63.5	89	95.5
L13	[mm]	--	118.5	136	162	176	225.5	250
L14	[mm]	--	43.5	48.5	58	63.5	82.5	86
L15	[mm]	--	75	87.5	104	112.5	143	164
L16	[mm]	--	33.8	39.1	50.0	60.5	76.2	89.9
L17	[mm]	--	67	73.5	84	95	117	130
L18	[mm]	--	125.5	125.5	136.5	147.5	184	197
L19	[mm]	--	110	133	152.5	178	228.5	241.5
D1	[mm]	--	ø64	ø90.5	ø90.5	ø90.5	ø127	ø127
D2 (h6)	[mm]	--	ø20	ø20	ø25	ø30	ø35	ø42
T1	[mm]	--	M8 x12	M8 x12	M8 x12	M8 x12	M8 x12	M8 x12
T2	[mm]	--	M8 x12	M8 x12	M10 x15	M10 x15	M12 x18	M16 x24
***1 ~**	[mm]	*9	Motor attachment dimensions are made to fit your servo motor.					

EJL SERIES

The EJL series is the perfect option for dynamic servo applications requiring high accuracy in a cost-effective package. The EJL series is available in 3 backlash levels, as low as 1 arc-min, to satisfy a variety of applications. Output options include single and dual shaft, hollow bore with keyway, hollow bore with shrink disc and robotic ISO flange. EJL is available in ratios as high as 90:1 in a single stage and maximum acceleration torque as high as 6250Nm.

Hardened and ground worms and bronze alloy wheels deliver high torque, smooth operation, and superior shock load absorption. Over-sized taper roller bearings accommodate high radial forces. A unique 3 bearing arrangement maintains proper worm bearing preload over all allowable temperature ranges.

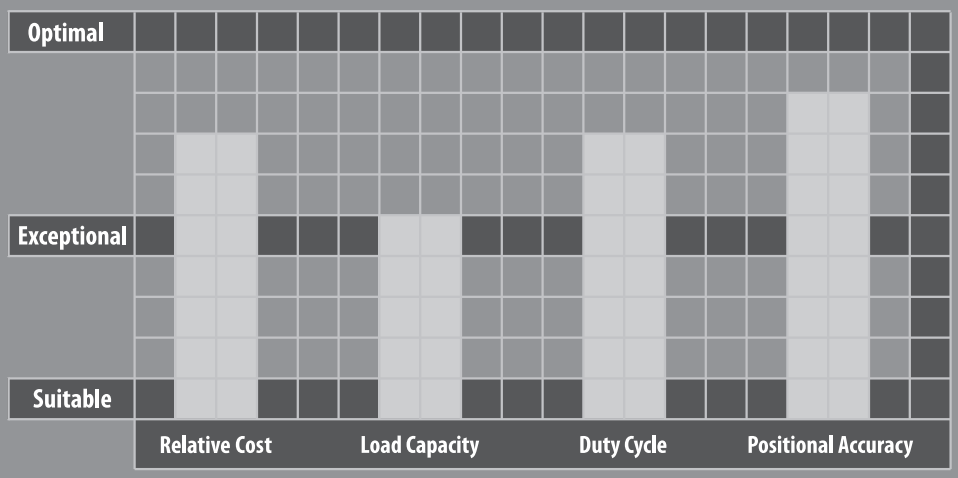

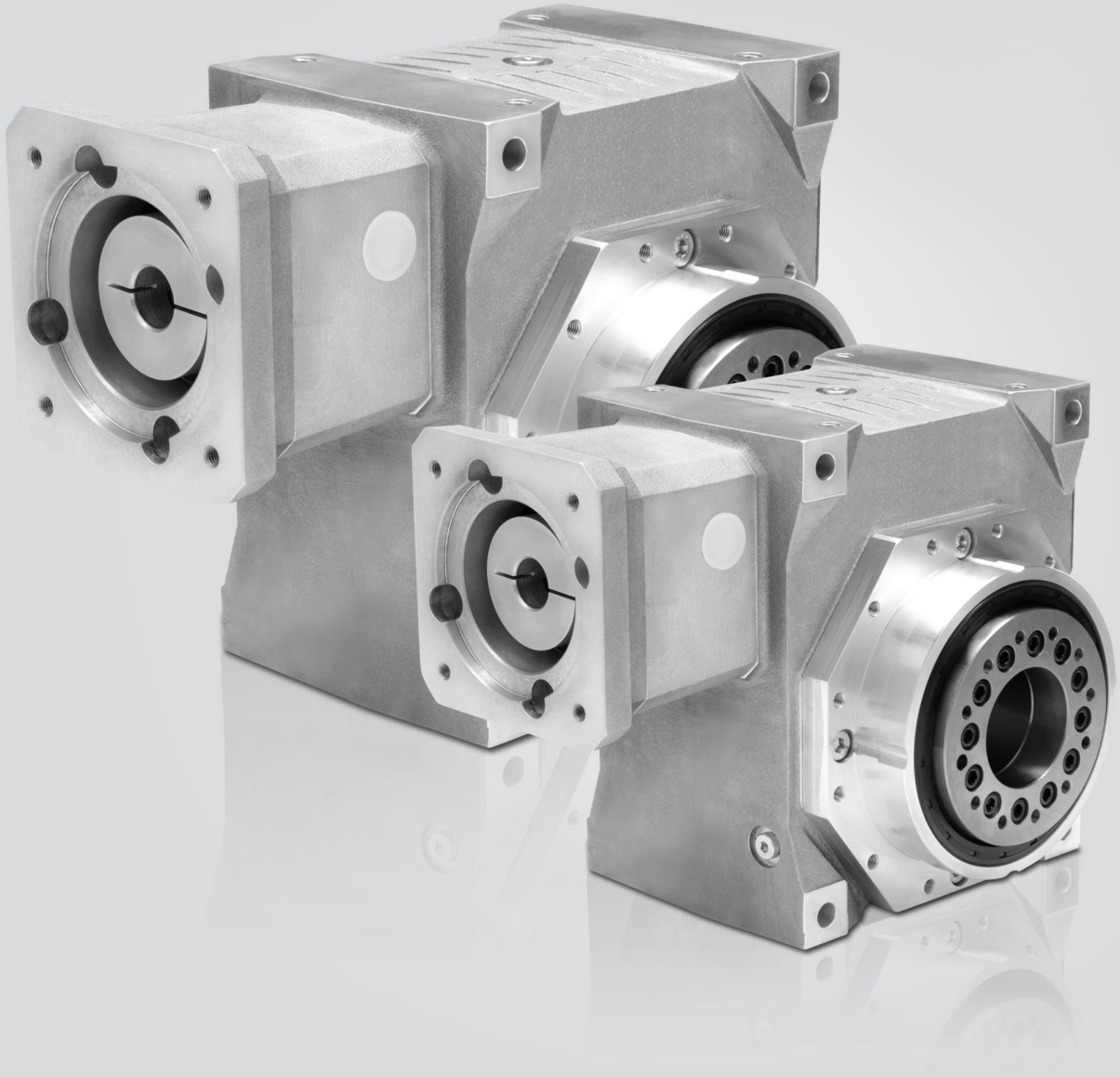

EJL SERIES

- Best price-performance ratio among all servo worm gearheads
- Three levels of backlash, as low as 1 arc-min to meet any application requirement
- Output options include single and dual shaft, hollow bore with keyway, hollow bore with shrink disc and robotic ISO flange
- 11 frame sizes with ratios up to 90:1 in a single stage

EJL Series Features

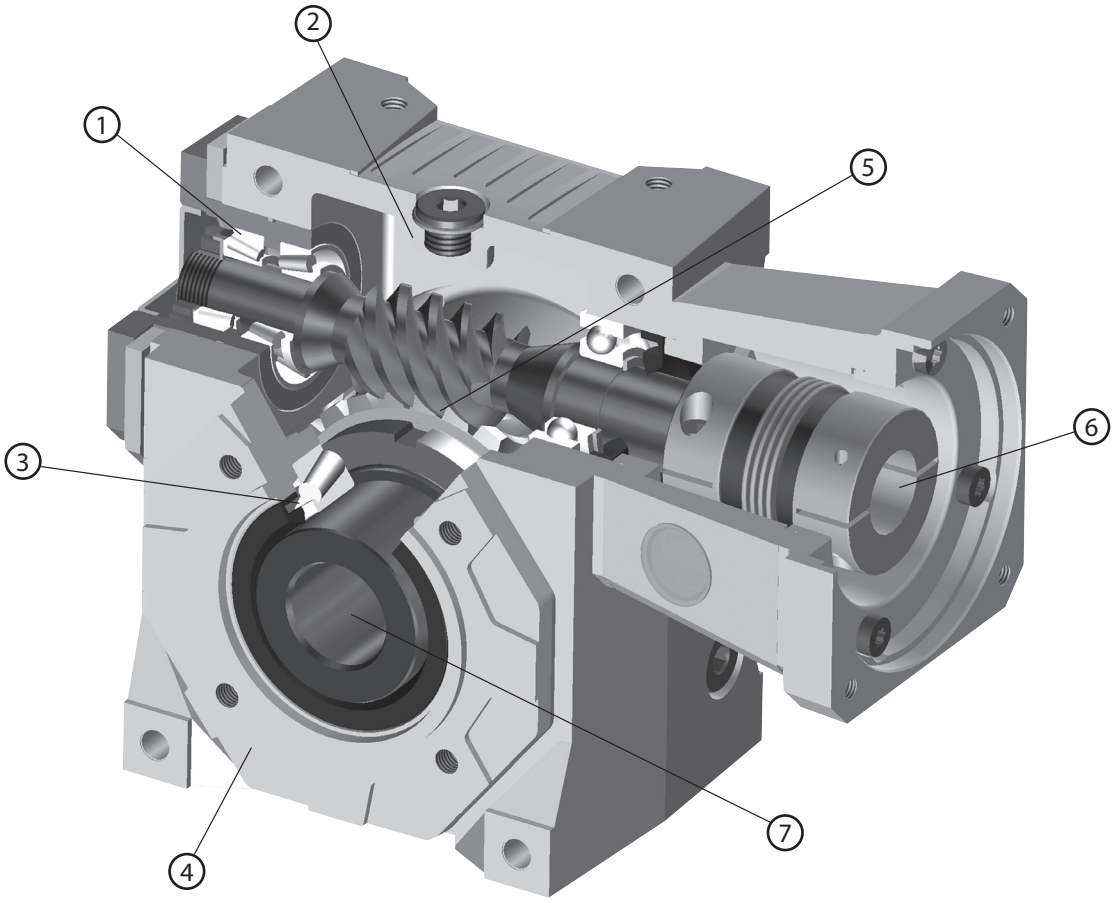

1. Tapered bearing input with constant preload over all allowable temperature ranges. High stiffness and long life
2. Maintenance-free, lubricated for life with high performance synthetic oil
3. Oversized tapered roller bearing at the output provides unmatched radial load and tilting moment capacity
4. Single piece housing made of cast and heat treated aluminum magnesium alloy offering superior rigidity and low weight (Sizes 125-200 utilize a cast iron housing)
5. Optimized gear contact pattern. 90% of teeth in contact resulting in excellent wear resistance and low backlash maintained throughout the life of the gearhead
6. Simple servomotor mounting. Adapter plates designed to mount to any motor and a high stiffness bellows coupling to eliminate shaft misalignment
7. Wide range of output options include single shaft, dual shaft, keyed hollow, shrink disc and robotic ISO flange

EJL Series Model Code

EJL – 63 – 30 – H0 L – A11130 – D14 – H1

- **H1** — Mounting position (sizes 125-200 Only)
- **A11130 – D14** — *Motor mounting code
- **L** — Backlash:
  - 0: Standard Backlash (10 arc-min)
  - L: Low Backlash (5 arc-min)
  - P: Precision Backlash (1 arc-min, 2 arc-min for sizes 125, 160, 200)
- **H0** — Output mounting type:
  - H0: Keyed Hollow Shaft
  - SR: Keyed Solid Shaft Right
  - SL: Keyed Solid Shaft Left
  - SW: Keyed Dual Solid Shaft
  - DR: Hollow Shrink Disc Right
  - DL: Hollow Shrink Disc Left
  - FR: Robot Flange Right
  - FL: Robot Flange Left
- **30** — Ratio: 3.125, 5.125, 5.2, 7.2, 7.25, 10.25, 14.5, 15.25, 19.5, 20.5, 29.5, 30, 45, 60, 90
- **63** — Frame size: 25, 35, 45, 55, 63, 75, 90, 110, 125, 160, 200
- **EJL** — Series

* Motor mounting code varies depending on the motor. Contact us to configure the code.

EJL 025 1-Stage Specifications

Frame Size	025					
Ratio	Unit	Note	5.2	7.25	10.25	14.5
Nominal Output Torque	[Nm]	*1	8	8	8	9
Maximum Acceleration Torque	[Nm]	*1	13	14	13	15
Emergency Stop Torque	[Nm]	--	46	46	46	46
No Load Running Torque	[Nm]	*2	0.23	0.25	0.19	0.18
Nominal Input Speed	[rpm]	*1	4,000			
Maximum Continuous Input Speed	[rpm]	*1	4,000			
Maximum Cyclic Input Speed	[rpm]	--	6,000			
Maximum Radial Load	[N]	*3	1500			
Maximum Axial Load	[N]	*4	500			
Moment of Inertia	[kgcm2]	--	0.02	0.02	0.01	0.01
Efficiency	[%]	*5	86	85	84	77
Torsional Rigidity	[Nm/arcmin]	--	2			
Maximum Torsional Backlash (Standard)	[Arc-min]	--	≤ 15			
Noise Level	dB [A]	*6	60			
Ambient Temperature	[°C]	--	-30 to +40			
Permitted Housing Temperature	[°C]	--	+80			
Protection Class	--	--	IP65			
Lubrication	--	--	Synthetic Oil			
Service Life	[Hours]	--	25,000			
Weight	[kg]	*7	1.4			

*1) Higher output torque is available at reduced speed. Contact us if you need to operate outside of these parameters

*2) Input torque with no load applied to the output shaft at 2,000 rpm

*3) The maximum radial load the gearbox can accept

*4) The maximum axial load the gearbox can accept

*5) The efficiency at the nominal output torque and input speed rating

*6) Measured with no load applied to the output shaft at 3,000 rpm and 1 meter distance

*7) Weight may vary slightly between models

EJL 025 1-Stage Specifications

Frame Size	**025**					
Ratio	Unit	Note	19.5	30	45	60
Nominal Output Torque	[Nm]	*1	9	11	11	10
Maximum Acceleration Torque	[Nm]	*1	15	18	18	16
Emergency Stop Torque	[Nm]	--	46	46	42	35
No Load Running Torque	[Nm]	*2	0.18	0.15	0.15	0.14
Nominal Input Speed	[rpm]	*1	4,000			
Maximum Continuous Input Speed	[rpm]	*1	4,000			
Maximum Cyclic Input Speed	[rpm]	--	6,000			
Maximum Radial Load	[N]	*3	1500			
Maximum Axial Load	[N]	*4	500			
Moment of Inertia	[kgcm2]	--	0.01	0.01	0.01	0.01
Efficiency	[%]	*5	74	65	59	53
Torsional Rigidity	[Nm/arcmin]	--	2			
Maximum Torsional Backlash (Standard)	[Arc-min]	--	≤ 15			
Noise Level	dB [A]	*6	60			
Ambient Temperature	[°C]	--	-30 to +40			
Permitted Housing Temperature	[°C]	--	+80			
Protection Class	--	--	IP65			
Lubrication	--	--	Synthetic Oil			
Service Life	[Hours]	--	25,000			
Weight	[kg]	*7	1.4			

*1) Higher output torque is available at reduced speed. Contact us if you need to operate outside of these parameters

*2) Input torque with no load applied to the output shaft at 2,000 rpm

*3) The maximum radial load the gearbox can accept

*4) The maximum axial load the gearbox can accept

*5) The efficiency at the nominal output torque and input speed rating

*6) Measured with no load applied to the output shaft at 3,000 rpm and 1 meter distance

*7) Weight may vary slightly between models

EJL 035 1-Stage Specifications

Frame Size	**035**						
Ratio	Unit	Note	5.2	7.25	10.25	14.5	19.5
Nominal Output Torque	[Nm]	*1	16	17	17	19	20
Maximum Acceleration Torque	[Nm]	*1	27	28	29	31	32
Emergency Stop Torque	[Nm]	--	96	96	96	96	96
No Load Running Torque	[Nm]	*2	0.46	0.46	0.30	0.32	0.30
Nominal Input Speed	[rpm]	*1	4,000				
Maximum Continuous Input Speed	[rpm]	*1	4,000				
Maximum Cyclic Input Speed	[rpm]	--	6,000				
Maximum Radial Load	[N]	*3	3,800				
Maximum Axial Load	[N]	*4	2,800				
Moment of Inertia	[kgcm2]	--	0.07	0.06	0.05	0.04	0.04
Efficiency	[%]	*5	91	89	87	81	78
Torsional Rigidity	[Nm/arcmin]	--	5				
Maximum Torsional Backlash (Standard)	[Arc-min]	--	≤ 10				
Maximum Torsional Backlash (Low)	[Arc-min]	--	≤ 5				
Maximum Torsional Backlash (Precision)	[Arc-min]	--	≤ 1				
Noise Level	dB [A]	*6	60				
Ambient Temperature	[°C]	--	-30 to +40				
Permitted Housing Temperature	[°C]	--	+80				
Protection Class	--	--	IP65				
Lubrication	--	--	Synthetic Oil				
Service Life	[Hours]	--	25,000				
Weight	[kg]	*7	3.5				

*1) Higher output torque is available at reduced speed. Contact us if you need to operate outside of these parameters

*2) Input torque with no load applied to the output shaft at 2,000 rpm

*3) The maximum radial load the gearbox can accept

*4) The maximum axial load the gearbox can accept

*5) The efficiency at the nominal output torque and input speed rating

*6) Measured with no load applied to the output shaft at 3,000 rpm and 1 meter distance

*7) Weight may vary slightly between models

EJL 035 1-Stage Specifications

Frame Size	**035**					
Ratio	Unit	Note	30	45	60	90
Nominal Output Torque	[Nm]	*1	23	23	22	21
Maximum Acceleration Torque	[Nm]	*1	37	36	34	32
Emergency Stop Torque	[Nm]	--	96	87	73	72
No Load Running Torque	[Nm]	*2	0.27	0.26	0.26	0.29
Nominal Input Speed	[rpm]	*1	4,000			
Maximum Continuous Input Speed	[rpm]	*1	4,000			
Maximum Cyclic Input Speed	[rpm]	--	6,000			
Maximum Radial Load	[N]	*3	3,800			
Maximum Axial Load	[N]	*4	2,800			
Moment of Inertia	[kgcm2]	--	0.04	0.04	0.03	0.02
Efficiency	[%]	*5	69	61	55	46
Torsional Rigidity	[Nm/arcmin]	--	5			
Maximum Torsional Backlash (Standard)	[Arc-min]	--	≤ 10			
Maximum Torsional Backlash (Low)	[Arc-min]	--	≤ 5			
Maximum Torsional Backlash (Precision)	[Arc-min]	--	≤ 1			
Noise Level	dB [A]	*6	60			
Ambient Temperature	[°C]	--	-30 to +40			
Permitted Housing Temperature	[°C]	--	+80			
Protection Class	--	--	IP65			
Lubrication	--	--	Synthetic Oil			
Service Life	[Hours]	--	25,000			
Weight	[kg]	*7	3.5			

*1) Higher output torque is available at reduced speed. Contact us if you need to operate outside of these parameters

*2) Input torque with no load applied to the output shaft at 2,000 rpm

*3) The maximum radial load the gearbox can accept

*4) The maximum axial load the gearbox can accept

*5) The efficiency at the nominal output torque and input speed rating

*6) Measured with no load applied to the output shaft at 3,000 rpm and 1 meter distance

*7) Weight may vary slightly between models

EJL 045 1-Stage Specifications

Frame Size	045						
Ratio	Unit	Note	3.125	5.2	7.25	10.25	14.5
Nominal Output Torque	[Nm]	*1	30	36	42	46	52
Maximum Acceleration Torque	[Nm]	*1	48	62	71	80	83
Emergency Stop Torque	[Nm]	--	214	214	214	214	214
No Load Running Torque	[Nm]	*2	1.07	0.98	0.86	0.77	0.66
Nominal Input Speed	[rpm]	*1	4,000				
Maximum Continuous Input Speed	[rpm]	*1	4,000				
Maximum Cyclic Input Speed	[rpm]	--	6,000				
Maximum Radial Load	[N]	*3	5,800				
Maximum Axial Load	[N]	*4	4,000				
Moment of Inertia	[kgcm2]	--	0.47	0.29	0.22	0.15	0.14
Efficiency	[%]	*5	93	92	91	90	86
Torsional Rigidity	[Nm/arcmin]	--	9				
Maximum Torsional Backlash (Standard)	[Arc-min]	--	≤ 10				
Maximum Torsional Backlash (Low)	[Arc-min]	--	≤ 5				
Maximum Torsional Backlash (Precision)	[Arc-min]	--	≤ 1				
Noise Level	dB [A]	*6	60				
Ambient Temperature	[°C]	--	-30 to +40				
Permitted Housing Temperature	[°C]	--	+80				
Protection Class	--	--	IP65				
Lubrication	--	--	Synthetic Oil				
Service Life	[Hours]	--	25,000				
Weight	[kg]	*7	6.5				

*1) Higher output torque is available at reduced speed. Contact us if you need to operate outside of these parameters

*2) Input torque with no load applied to the output shaft at 2,000 rpm

*3) The maximum radial load the gearbox can accept

*4) The maximum axial load the gearbox can accept

*5) The efficiency at the nominal output torque and input speed rating

*6) Measured with no load applied to the output shaft at 3,000 rpm and 1 meter distance

*7) Weight may vary slightly between models

EJL 045 1-Stage Specifications

Frame Size	**045**						
Ratio	Unit	Note	19.5	30	45	60	90
Nominal Output Torque	[Nm]	*1	50	55	54	50	46
Maximum Acceleration Torque	[Nm]	*1	80	88	86	78	71
Emergency Stop Torque	[Nm]	--	214	214	185	170	154
No Load Running Torque	[Nm]	*2	0.58	0.59	0.46	0.54	0.56
Nominal Input Speed	[rpm]	*1	4,000				
Maximum Continuous Input Speed	[rpm]	*1	4,000				
Maximum Cyclic Input Speed	[rpm]	--	6,000				
Maximum Radial Load	[N]	*3	5,800				
Maximum Axial Load	[N]	*4	4,000				
Moment of Inertia	[kgcm2]	--	0.10	0.10	0.08	0.07	0.05
Efficiency	[%]	*5	84	76	69	64	56
Torsional Rigidity	[Nm/arcmin]	--	9				
Maximum Torsional Backlash (Standard)	[Arc-min]	--	≤ 10				
Maximum Torsional Backlash (Low)	[Arc-min]	--	≤ 5				
Maximum Torsional Backlash (Precision)	[Arc-min]	--	≤ 1				
Noise Level	dB [A]	*6	60				
Ambient Temperature	[°C]	--	-30 to +40				
Permitted Housing Temperature	[°C]	--	+80				
Protection Class	--	--	IP65				
Lubrication	--	--	Synthetic Oil				
Service Life	[Hours]	--	25,000				
Weight	[kg]	*7	6.5				

*1) Higher output torque is available at reduced speed. Contact us if you need to operate outside of these parameters

*2) Input torque with no load applied to the output shaft at 2,000 rpm

*3) The maximum radial load the gearbox can accept

*4) The maximum axial load the gearbox can accept

*5) The efficiency at the nominal output torque and input speed rating

*6) Measured with no load applied to the output shaft at 3,000 rpm and 1 meter distance

*7) Weight may vary slightly between models

EJL 055 1-Stage Specifications

Frame Size	**055**						
Ratio	Unit	Note	3.125	5.2	7.25	10.25	14.5
Nominal Output Torque	[Nm]	*1	52	60	65	76	71
Maximum Acceleration Torque	[Nm]	*1	83	103	111	132	115
Emergency Stop Torque	[Nm]	--	307	307	307	307	307
No Load Running Torque	[Nm]	*2	1.24	1.15	1.15	0.96	0.96
Nominal Input Speed	[rpm]	*1	4,000				
Maximum Continuous Input Speed	[rpm]	*1	4,000				
Maximum Cyclic Input Speed	[rpm]	--	6,000				
Maximum Radial Load	[N]	*3	7,000				
Maximum Axial Load	[N]	*4	4,800				
Moment of Inertia	[kgcm2]	--	1.1	0.75	0.53	0.45	0.38
Efficiency	[%]	*5	93	93	91	88	85
Torsional Rigidity	[Nm/arcmin]	--	20				
Maximum Torsional Backlash (Standard)	[Arc-min]	--	≤ 10				
Maximum Torsional Backlash (Low)	[Arc-min]	--	≤ 5				
Maximum Torsional Backlash (Precision)	[Arc-min]	--	≤ 1				
Noise Level	dB [A]	*6	70				
Ambient Temperature	[°C]	--	-30 to +40				
Permitted Housing Temperature	[°C]	--	+80				
Protection Class	--	--	IP65				
Lubrication	--	--	Synthetic Oil				
Service Life	[Hours]	--	25,000				
Weight	[kg]	*7	8.9				

*1) Higher output torque is available at reduced speed. Contact us if you need to operate outside of these parameters

*2) Input torque with no load applied to the output shaft at 2,000 rpm

*3) The maximum radial load the gearbox can accept

*4) The maximum axial load the gearbox can accept

*5) The efficiency at the nominal output torque and input speed rating

*6) Measured with no load applied to the output shaft at 3,000 rpm and 1 meter distance

*7) Weight may vary slightly between models

EJL 055 1-Stage Specifications

Frame Size	**055**						
Ratio	Unit	Note	19.5	30	45	60	90
Nominal Output Torque	[Nm]	*1	77	83	83	82	76
Maximum Acceleration Torque	[Nm]	*1	123	130	130	128	117
Emergency Stop Torque	[Nm]	--	307	307	307	286	263
No Load Running Torque	[Nm]	*2	0.80	0.82	0.75	0.61	0.66
Nominal Input Speed	[rpm]	*1	4,000				
Maximum Continuous Input Speed	[rpm]	*1	4,000				
Maximum Cyclic Input Speed	[rpm]	--	6,000				
Maximum Radial Load	[N]	*3	7,000				
Maximum Axial Load	[N]	*4	4,800				
Moment of Inertia	[kgcm2]	--	0.31	0.34	0.28	0.26	0.12
Efficiency	[%]	*5	83	75	69	63	55
Torsional Rigidity	[Nm/arcmin]	--	20				
Maximum Torsional Backlash (Standard)	[Arc-min]	--	≤ 10				
Maximum Torsional Backlash (Low)	[Arc-min]	--	≤ 5				
Maximum Torsional Backlash (Precision)	[Arc-min]	--	≤ 1				
Noise Level	dB [A]	*6	70				
Ambient Temperature	[°C]	--	-30 to +40				
Permitted Housing Temperature	[°C]	--	+80				
Protection Class	--	--	IP65				
Lubrication	--	--	Synthetic Oil				
Service Life	[Hours]	--	25,000				
Weight	[kg]	*7	8.9				

*1) Higher output torque is available at reduced speed. Contact us if you need to operate outside of these parameters

*2) Input torque with no load applied to the output shaft at 2,000 rpm

*3) The maximum radial load the gearbox can accept

*4) The maximum axial load the gearbox can accept

*5) The efficiency at the nominal output torque and input speed rating

*6) Measured with no load applied to the output shaft at 3,000 rpm and 1 meter distance

*7) Weight may vary slightly between models

EJL 063 1-Stage Specifications

Frame Size	063						
Ratio	Unit	Note	5.2	7.25	10.25	14.5	19.5
Nominal Output Torque	[Nm]	*1	90	91	103	110	119
Maximum Acceleration Torque	[Nm]	*1	153	155	169	179	190
Emergency Stop Torque	[Nm]	--	497	497	497	497	497
No Load Running Torque	[Nm]	*2	2.51	1.76	1.81	1.15	1.08
Nominal Input Speed	[rpm]	*1	4,000				
Maximum Continuous Input Speed	[rpm]	*1	4,000				
Maximum Cyclic Input Speed	[rpm]	--	6,000				
Maximum Radial Load	[N]	*3	8,800				
Maximum Axial Load	[N]	*4	8,500				
Moment of Inertia	[kgcm2]	--	1.6	0.9	0.8	0.69	0.55
Efficiency	[%]	*5	93	92	91	87	85
Torsional Rigidity	[Nm/arcmin]	--	36				
Maximum Torsional Backlash (Standard)	[Arc-min]	--	≤ 10				
Maximum Torsional Backlash (Low)	[Arc-min]	--	≤ 5				
Maximum Torsional Backlash (Precision)	[Arc-min]	--	≤ 1				
Noise Level	dB [A]	*6	70				
Ambient Temperature	[°C]	--	-30 to +40				
Permitted Housing Temperature	[°C]	--	+80				
Protection Class	--	--	IP65				
Lubrication	--	--	Synthetic Oil				
Service Life	[Hours]	--	25,000				
Weight	[kg]	*7	14.5				

*1) Higher output torque is available at reduced speed. Contact us if you need to operate outside of these parameters

*2) Input torque with no load applied to the output shaft at 2,000 rpm

*3) The maximum radial load the gearbox can accept

*4) The maximum axial load the gearbox can accept

*5) The efficiency at the nominal output torque and input speed rating

*6) Measured with no load applied to the output shaft at 3,000 rpm and 1 meter distance

*7) Weight may vary slightly between models

EJL 063 1-Stage Specifications

Frame Size	**063**					
Ratio	Unit	Note	30	45	60	90
Nominal Output Torque	[Nm]	*1	138	123	121	110
Maximum Acceleration Torque	[Nm]	*1	218	193	189	169
Emergency Stop Torque	[Nm]	--	497	403	404	368
No Load Running Torque	[Nm]	*2	1.10	1.02	1.15	1.18
Nominal Input Speed	[rpm]	*1	4,000			
Maximum Continuous Input Speed	[rpm]	*1	4,000			
Maximum Cyclic Input Speed	[rpm]	--	6,000			
Maximum Radial Load	[N]	*3	8,800			
Maximum Axial Load	[N]	*4	8,500			
Moment of Inertia	[kgcm2]	--	0.59	0.5	0.47	0.32
Efficiency	[%]	*5	78	72	67	59
Torsional Rigidity	[Nm/arcmin]	--	36			
Maximum Torsional Backlash (Standard)	[Arc-min]	--	≤ 10			
Maximum Torsional Backlash (Low)	[Arc-min]	--	≤ 5			
Maximum Torsional Backlash (Precision)	[Arc-min]	--	≤ 1			
Noise Level	dB [A]	*6	70			
Ambient Temperature	[°C]	--	-30 to +40			
Permitted Housing Temperature	[°C]	--	+80			
Protection Class	--	--	IP65			
Lubrication	--	--	Synthetic Oil			
Service Life	[Hours]	--	25,000			
Weight	[kg]	*7	14.5			

*1) Higher output torque is available at reduced speed. Contact us if you need to operate outside of these parameters

*2) Input torque with no load applied to the output shaft at 2,000 rpm

*3) The maximum radial load the gearbox can accept

*4) The maximum axial load the gearbox can accept

*5) The efficiency at the nominal output torque and input speed rating

*6) Measured with no load applied to the output shaft at 3,000 rpm and 1 meter distance

*7) Weight may vary slightly between models

EJL 075 1-Stage Specifications

Frame Size	075						
Ratio	Unit	Note	5.2	7.25	10.25	14.5	19.5
Nominal Output Torque	[Nm]	*1	174	161	168	195	194
Maximum Acceleration Torque	[Nm]	*1	296	270	269	315	310
Emergency Stop Torque	[Nm]	--	834	834	834	834	834
No Load Running Torque	[Nm]	*2	2.89	2.55	2.26	1.93	1.71
Nominal Input Speed	[rpm]	*1	3,000				
Maximum Continuous Input Speed	[rpm]	*1	4,000				
Maximum Cyclic Input Speed	[rpm]	--	6,000				
Maximum Radial Load	[N]	*3	10,500				
Maximum Axial Load	[N]	*4	10,500				
Moment of Inertia	[kgcm2]	--	3.7	2.5	2.2	1.9	1.5
Efficiency	[%]	*5	94	92	91	87	85
Torsional Rigidity	[Nm/arcmin]	--	50				
Maximum Torsional Backlash (Standard)	[Arc-min]	--	≤ 10				
Maximum Torsional Backlash (Low)	[Arc-min]	--	≤ 5				
Maximum Torsional Backlash (Precision)	[Arc-min]	--	≤ 1				
Noise Level	dB [A]	*6	75				
Ambient Temperature	[°C]	--	-30 to +40				
Permitted Housing Temperature	[°C]	--	+80				
Protection Class	--	--	IP65				
Lubrication	--	--	Synthetic Oil				
Service Life	[Hours]	--	25,000				
Weight	[kg]	*7	21.3				

*1) Higher output torque is available at reduced speed. Contact us if you need to operate outside of these parameters

*2) Input torque with no load applied to the output shaft at 2,000 rpm

*3) The maximum radial load the gearbox can accept

*4) The maximum axial load the gearbox can accept

*5) The efficiency at the nominal output torque and input speed rating

*6) Measured with no load applied to the output shaft at 3,000 rpm and 1 meter distance

*7) Weight may vary slightly between models

EJL 075 1-Stage Specifications

Frame Size	**075**					
Ratio	Unit	Note	30	45	60	90
Nominal Output Torque	[Nm]	*1	212	212	195	184
Maximum Acceleration Torque	[Nm]	*1	334	331	300	280
Emergency Stop Torque	[Nm]	--	834	718	657	625
No Load Running Torque	[Nm]	*2	1.74	1.41	1.60	1.65
Nominal Input Speed	[rpm]	*1	3,000			
Maximum Continuous Input Speed	[rpm]	*1	4,000			
Maximum Cyclic Input Speed	[rpm]	--	6,000			
Maximum Radial Load	[N]	*3	10,500			
Maximum Axial Load	[N]	*4	10,500			
Moment of Inertia	[kgcm2]	--	1.6	1.4	1.3	0.8
Efficiency	[%]	*5	80	71	66	57
Torsional Rigidity	[Nm/arcmin]	--	50			
Maximum Torsional Backlash (Standard)	[Arc-min]	--	≤ 10			
Maximum Torsional Backlash (Low)	[Arc-min]	--	≤ 5			
Maximum Torsional Backlash (Precision)	[Arc-min]	--	≤ 1			
Noise Level	dB [A]	*6	75			
Ambient Temperature	[°C]	--	-30 to +40			
Permitted Housing Temperature	[°C]	--	+80			
Protection Class	--	--	IP65			
Lubrication	--	--	Synthetic Oil			
Service Life	[Hours]	--	25,000			
Weight	[kg]	*7	21.3			

*1) Higher output torque is available at reduced speed. Contact us if you need to operate outside of these parameters

*2) Input torque with no load applied to the output shaft at 2,000 rpm

*3) The maximum radial load the gearbox can accept

*4) The maximum axial load the gearbox can accept

*5) The efficiency at the nominal output torque and input speed rating

*6) Measured with no load applied to the output shaft at 3,000 rpm and 1 meter distance

*7) Weight may vary slightly between models

EJL 090 1-Stage Specifications

Frame Size	**090**						
Ratio	Unit	Note	5.2	7.25	10.25	14.5	19.5
Nominal Output Torque	[Nm]	*1	271	306	314	314	367
Maximum Acceleration Torque	[Nm]	*1	460	490	528	504	584
Emergency Stop Torque	[Nm]	--	1,543	1,543	1,543	1,543	1,543
No Load Running Torque	[Nm]	*2	2.97	2.62	2.33	1.99	1.76
Nominal Input Speed	[rpm]	*1	3,000				
Maximum Continuous Input Speed	[rpm]	*1	4,000				
Maximum Cyclic Input Speed	[rpm]	--	6,000				
Maximum Radial Load	[N]	*3	15,800				
Maximum Axial Load	[N]	*4	13,000				
Moment of Inertia	[kgcm2]	--	8.5	6	3.8	3.2	2.5
Efficiency	[%]	*5	94	94	92	88	87
Torsional Rigidity	[Nm/arcmin]	--	75				
Maximum Torsional Backlash (Standard)	[Arc-min]	--	≤ 10				
Maximum Torsional Backlash (Low)	[Arc-min]	--	≤ 5				
Maximum Torsional Backlash (Precision)	[Arc-min]	--	≤ 1				
Noise Level	dB [A]	*6	75				
Ambient Temperature	[°C]	--	-30 to +40				
Permitted Housing Temperature	[°C]	--	+80				
Protection Class	--	--	IP65				
Lubrication	--	--	Synthetic Oil				
Service Life	[Hours]	--	25,000				
Weight	[kg]	*7	33.8				

*1) Higher output torque is available at reduced speed. Contact us if you need to operate outside of these parameters

*2) Input torque with no load applied to the output shaft at 2,000 rpm

*3) The maximum radial load the gearbox can accept

*4) The maximum axial load the gearbox can accept

*5) The efficiency at the nominal output torque and input speed rating

*6) Measured with no load applied to the output shaft at 3,000 rpm and 1 meter distance

*7) Weight may vary slightly between models

EJL 090 1-Stage Specifications

Frame Size	**090**					
Ratio	Unit	Note	30	45	60	90
Nominal Output Torque	[Nm]	*1	362	385	364	332
Maximum Acceleration Torque	[Nm]	*1	572	599	559	505
Emergency Stop Torque	[Nm]	--	1,543	1,255	1,230	1,114
No Load Running Torque	[Nm]	*2	1.79	1.43	1.65	1.70
Nominal Input Speed	[rpm]	*1	3,000			
Maximum Continuous Input Speed	[rpm]	*1	4,000			
Maximum Cyclic Input Speed	[rpm]	--	6,000			
Maximum Radial Load	[N]	*3	15,800			
Maximum Axial Load	[N]	*4	13,000			
Moment of Inertia	[kgcm2]	--	2.6	1.9	1.7	1
Efficiency	[%]	*5	80	76	72	64
Torsional Rigidity	[Nm/arcmin]	--	75			
Maximum Torsional Backlash (Standard)	[Arc-min]	--	≤ 10			
Maximum Torsional Backlash (Low)	[Arc-min]	--	≤ 5			
Maximum Torsional Backlash (Precision)	[Arc-min]	--	≤ 1			
Noise Level	dB [A]	*6	75			
Ambient Temperature	[°C]	--	-30 to +40			
Permitted Housing Temperature	[°C]	--	+80			
Protection Class	--	--	IP65			
Lubrication	--	--	Synthetic Oil			
Service Life	[Hours]	--	25,000			
Weight	[kg]	*7	33.8			

*1) Higher output torque is available at reduced speed. Contact us if you need to operate outside of these parameters

*2) Input torque with no load applied to the output shaft at 2,000 rpm

*3) The maximum radial load the gearbox can accept

*4) The maximum axial load the gearbox can accept

*5) The efficiency at the nominal output torque and input speed rating

*6) Measured with no load applied to the output shaft at 3,000 rpm and 1 meter distance

*7) Weight may vary slightly between models

EJL 110 1-Stage Specifications

Frame Size	110						
Ratio	Unit	Note	5.2	7.25	10.25	14.5	19.5
Nominal Output Torque	[Nm]	*1	458	488	522	519	589
Maximum Acceleration Torque	[Nm]	*1	779	795	878	830	943
Emergency Stop Torque	[Nm]	--	2,289	2,289	2,289	2,289	2,289
No Load Running Torque	[Nm]	*2	3.20	2.82	2.51	2.14	1.89
Nominal Input Speed	[rpm]	*1	3,000				
Maximum Continuous Input Speed	[rpm]	*1	4,000				
Maximum Cyclic Input Speed	[rpm]	--	6,000				
Maximum Radial Load	[N]	*3	21,500				
Maximum Axial Load	[N]	*4	16,000				
Moment of Inertia	[kgcm2]	--	18.5	13	8.5	6.3	4.6
Efficiency	[%]	*5	94	94	92	90	88
Torsional Rigidity	[Nm/arcmin]	--	120				
Maximum Torsional Backlash (Standard)	[Arc-min]	--	≤ 10				
Maximum Torsional Backlash (Low)	[Arc-min]	--	≤ 5				
Maximum Torsional Backlash (Precision)	[Arc-min]	--	≤ 1				
Noise Level	dB [A]	*6	75				
Ambient Temperature	[°C]	--	-30 to +40				
Permitted Housing Temperature	[°C]	--	+80				
Protection Class	--	--	IP65				
Lubrication	--	--	Synthetic Oil				
Service Life	[Hours]	--	25,000				
Weight	[kg]	*7	48.4				

*1) Higher output torque is available at reduced speed. Contact us if you need to operate outside of these parameters

*2) Input torque with no load applied to the output shaft at 2,000 rpm

*3) The maximum radial load the gearbox can accept

*4) The maximum axial load the gearbox can accept

*5) The efficiency at the nominal output torque and input speed rating

*6) Measured with no load applied to the output shaft at 3,000 rpm and 1 meter distance

*7) Weight may vary slightly between models

EJL 110 1-Stage Specifications

Frame Size	**110**					
Ratio	Unit	Note	30	45	60	90
Nominal Output Torque	[Nm]	*1	688	665	588	557
Maximum Acceleration Torque	[Nm]	*1	1,100	1,037	905	847
Emergency Stop Torque	[Nm]	--	2,289	2,152	2,094	1,941
No Load Running Torque	[Nm]	*2	1.93	1.51	1.78	1.83
Nominal Input Speed	[rpm]	*1	3,000			
Maximum Continuous Input Speed	[rpm]	*1	4,000			
Maximum Cyclic Input Speed	[rpm]	--	6,000			
Maximum Radial Load	[N]	*3	21,500			
Maximum Axial Load	[N]	*4	16,000			
Moment of Inertia	[kgcm2]	--	3.5	3.3	3	1.7
Efficiency	[%]	*5	83	78	73	66
Torsional Rigidity	[Nm/arcmin]	--	120			
Maximum Torsional Backlash (Standard)	[Arc-min]	--	≤ 10			
Maximum Torsional Backlash (Low)	[Arc-min]	--	≤ 5			
Maximum Torsional Backlash (Precision)	[Arc-min]	--	≤ 1			
Noise Level	dB [A]	*6	75			
Ambient Temperature	[°C]	--	-30 to +40			
Permitted Housing Temperature	[°C]	--	+80			
Protection Class	--	--	IP65			
Lubrication	--	--	Synthetic Oil			
Service Life	[Hours]	--	25,000			
Weight	[kg]	*7	48.4			

*1) Higher output torque is available at reduced speed. Contact us if you need to operate outside of these parameters

*2) Input torque with no load applied to the output shaft at 2,000 rpm

*3) The maximum radial load the gearbox can accept

*4) The maximum axial load the gearbox can accept

*5) The efficiency at the nominal output torque and input speed rating

*6) Measured with no load applied to the output shaft at 3,000 rpm and 1 meter distance

*7) Weight may vary slightly between models

EJL 125 1-Stage Specifications

Frame Size	**125**						
Ratio	Unit	Note	5.125	7.2	10.25	15.25	20.5
Nominal Output Torque	[Nm]	*1	716	742	725	625	877
Maximum Acceleration Torque	[Nm]	*1	1,181	1,224	1,196	1,031	1,447
Emergency Stop Torque	[Nm]	--	3,767	3,767	3,767	3,342	3,767
No Load Running Torque	[Nm]	*2	4.80	4.23	3.76	3.21	2.84
Nominal Input Speed	[rpm]	*1	3,000				
Maximum Continuous Input Speed	[rpm]	*1	4,000				
Maximum Cyclic Input Speed	[rpm]	--	6,000				
Maximum Radial Load	[N]	*3	26,000				
Maximum Axial Load	[N]	*4	22,000				
Moment of Inertia	[kgcm2]	--	50	38	30.5	25	23.4
Efficiency	[%]	*5	95	95	94	91	89
Torsional Rigidity	[Nm/arcmin]	--	180				
Maximum Torsional Backlash (Standard)	[Arc-min]	--	≤ 5				
Maximum Torsional Backlash (Precision)	[Arc-min]	--	≤ 2				
Noise Level	dB [A]	*6	80				
Ambient Temperature	[°C]	--	-30 to +40				
Permitted Housing Temperature	[°C]	--	+80				
Protection Class	--	--	IP65				
Lubrication	--	--	Synthetic Oil				
Service Life	[Hours]	--	25,000				
Weight	[kg]	*7	97.5				

*1) Higher output torque is available at reduced speed. Contact us if you need to operate outside of these parameters

*2) Input torque with no load applied to the output shaft at 2,000 rpm

*3) The maximum radial load the gearbox can accept

*4) The maximum axial load the gearbox can accept

*5) The efficiency at the nominal output torque and input speed rating

*6) Measured with no load applied to the output shaft at 3,000 rpm and 1 meter distance

*7) Weight may vary slightly between models

EJL 125 1-Stage Specifications

Frame Size	**125**					
Ratio	Unit	Note	29.5	45	60	90
Nominal Output Torque	[Nm]	*1	731	952	815	680
Maximum Acceleration Torque	[Nm]	*1	1,206	1,571	1,345	1,122
Emergency Stop Torque	[Nm]	--	3,295	3,767	2,937	2,502
No Load Running Torque	[Nm]	*2	2.90	2.27	2.66	2.74
Nominal Input Speed	[rpm]	*1	3,000			
Maximum Continuous Input Speed	[rpm]	*1	4,000			
Maximum Cyclic Input Speed	[rpm]	--	6,000			
Maximum Radial Load	[N]	*3	26,000			
Maximum Axial Load	[N]	*4	22,000			
Moment of Inertia	[kgcm2]	--	23.15	21	20	19
Efficiency	[%]	*5	85	80	74	64
Torsional Rigidity	[Nm/arcmin]	--	180			
Maximum Torsional Backlash (Standard)	[Arc-min]	--	≤ 5			
Maximum Torsional Backlash (Precision)	[Arc-min]	--	≤ 2			
Noise Level	dB [A]	*6	80			
Ambient Temperature	[°C]	--	-30 to +40			
Permitted Housing Temperature	[°C]	--	+80			
Protection Class	--	--	IP65			
Lubrication	--	--	Synthetic Oil			
Service Life	[Hours]	--	25,000			
Weight	[kg]	*7	97.5			

*1) Higher output torque is available at reduced speed. Contact us if you need to operate outside of these parameters

*2) Input torque with no load applied to the output shaft at 2,000 rpm

*3) The maximum radial load the gearbox can accept

*4) The maximum axial load the gearbox can accept

*5) The efficiency at the nominal output torque and input speed rating

*6) Measured with no load applied to the output shaft at 3,000 rpm and 1 meter distance

*7) Weight may vary slightly between models

EJL 160 1-Stage Specifications

Frame Size	**160**						
Ratio	Unit	Note	5.125	7.2	10.25	15.25	20.5
Nominal Output Torque	[Nm]	*1	1,648	1,569	1,650	1,443	1,856
Maximum Acceleration Torque	[Nm]	*1	2,719	2,589	2,723	2,381	3,062
Emergency Stop Torque	[Nm]	--	7,251	7,251	7,251	5,572	7,251
No Load Running Torque	[Nm]	*2	7.20	6.35	5.64	4.82	4.26
Nominal Input Speed	[rpm]	*1	2,000				
Maximum Continuous Input Speed	[rpm]	*1	4,000				
Maximum Cyclic Input Speed	[rpm]	--	6,000				
Maximum Radial Load	[N]	*3	34,100				
Maximum Axial Load	[N]	*4	34,000				
Moment of Inertia	[kgcm2]	--	120	77	63	52.7	51.5
Efficiency	[%]	*5	96	95	94	92	90
Torsional Rigidity	[Nm/arcmin]	--	350				
Maximum Torsional Backlash (Standard)	[Arc-min]	--	≤ 5				
Maximum Torsional Backlash (Precision)	[Arc-min]	--	≤ 2				
Noise Level	dB [A]	*6	80				
Ambient Temperature	[°C]	--	-30 to +40				
Permitted Housing Temperature	[°C]	--	+80				
Protection Class	--	--	IP65				
Lubrication	--	--	Synthetic Oil				
Service Life	[Hours]	--	25,000				
Weight	[kg]	*7	172.3				

*1) Higher output torque is available at reduced speed. Contact us if you need to operate outside of these parameters

*2) Input torque with no load applied to the output shaft at 2,000 rpm

*3) The maximum radial load the gearbox can accept

*4) The maximum axial load the gearbox can accept

*5) The efficiency at the nominal output torque and input speed rating

*6) Measured with no load applied to the output shaft at 3,000 rpm and 1 meter distance

*7) Weight may vary slightly between models

EJL 160 1-Stage Specifications

Frame Size	**160**					
Ratio	Unit	Note	29.5	45	60	90
Nominal Output Torque	[Nm]	*1	1,535	2,211	1,723	1,489
Maximum Acceleration Torque	[Nm]	*1	2,533	3,648	2,843	2,457
Emergency Stop Torque	[Nm]	--	6,571	7,251	6,331	4,933
No Load Running Torque	[Nm]	*2	4.35	3.41	4.00	4.11
Nominal Input Speed	[rpm]	*1	2,000			
Maximum Continuous Input Speed	[rpm]	*1	4,000			
Maximum Cyclic Input Speed	[rpm]	--	6,000			
Maximum Radial Load	[N]	*3	34,100			
Maximum Axial Load	[N]	*4	34,000			
Moment of Inertia	[kgcm2]	--	52.8	46.5	40	38
Efficiency	[%]	*5	86	81	76	67
Torsional Rigidity	[Nm/arcmin]	--	350			
Maximum Torsional Backlash (Standard)	[Arc-min]	--	≤ 5			
Maximum Torsional Backlash (Precision)	[Arc-min]	--	≤ 2			
Noise Level	dB [A]	*6	80			
Ambient Temperature	[°C]	--	-30 to +40			
Permitted Housing Temperature	[°C]	--	+80			
Protection Class	--	--	IP65			
Lubrication	--	--	Synthetic Oil			
Service Life	[Hours]	--	25,000			
Weight	[kg]	*7	172.3			

*1) Higher output torque is available at reduced speed. Contact us if you need to operate outside of these parameters

*2) Input torque with no load applied to the output shaft at 2,000 rpm

*3) The maximum radial load the gearbox can accept

*4) The maximum axial load the gearbox can accept

*5) The efficiency at the nominal output torque and input speed rating

*6) Measured with no load applied to the output shaft at 3,000 rpm and 1 meter distance

*7) Weight may vary slightly between models

EJL 200 1-Stage Specifications

Frame Size	200						
Ratio	Unit	Note	5.125	7.2	10.25	15.25	20.5
Nominal Output Torque	[Nm]	*1	2,954	3,042	2,946	2,540	3,538
Maximum Acceleration Torque	[Nm]	*1	4,874	5,019	4,861	4,191	5,838
Emergency Stop Torque	[Nm]	--	12,826	12,826	12,826	12,448	12,826
No Load Running Torque	[Nm]	*2	10.80	9.52	8.46	7.23	6.39
Nominal Input Speed	[rpm]	*1	2,000				
Maximum Continuous Input Speed	[rpm]	*1	4,000				
Maximum Cyclic Input Speed	[rpm]	--	6,000				
Maximum Radial Load	[N]	*3	71,700				
Maximum Axial Load	[N]	*4	71,000				
Moment of Inertia	[kgcm2]	--	287	177	143	102	96
Efficiency	[%]	*5	96	96	95	93	91
Torsional Rigidity	[Nm/arcmin]	--	600				
Maximum Torsional Backlash (Standard)	[Arc-min]	--	≤ 5				
Maximum Torsional Backlash (Precision)	[Arc-min]	--	≤ 2				
Noise Level	dB [A]	*6	80				
Ambient Temperature	[°C]	--	-30 to +40				
Permitted Housing Temperature	[°C]	--	+80				
Protection Class	--	--	IP65				
Lubrication	--	--	Synthetic Oil				
Service Life	[Hours]	--	25,000				
Weight	[kg]	*7	369.68				

*1) Higher output torque is available at reduced speed. Contact us if you need to operate outside of these parameters

*2) Input torque with no load applied to the output shaft at 2,000 rpm

*3) The maximum radial load the gearbox can accept

*4) The maximum axial load the gearbox can accept

*5) The efficiency at the nominal output torque and input speed rating

*6) Measured with no load applied to the output shaft at 3,000 rpm and 1 meter distance

*7) Weight may vary slightly between models

EJL 200 1-Stage Specifications

Frame Size	**200**					
Ratio	Unit	Note	29.5	45	60	90
Nominal Output Torque	[Nm]	*1	2,925	3,788	3,159	2,641
Maximum Acceleration Torque	[Nm]	*1	4,826	6,250	5,212	4,358
Emergency Stop Torque	[Nm]	--	12,277	12,826	11,674	9,323
No Load Running Torque	[Nm]	*2	6.52	5.11	5.99	6.17
Nominal Input Speed	[rpm]	*1	2,000			
Maximum Continuous Input Speed	[rpm]	*1	4,000			
Maximum Cyclic Input Speed	[rpm]	--	6,000			
Maximum Radial Load	[N]	*3	71,700			
Maximum Axial Load	[N]	*4	71,000			
Moment of Inertia	[kgcm2]	--	99	82.5	71	69
Efficiency	[%]	*5	87	83	77	69
Torsional Rigidity	[Nm/arcmin]	--	600			
Maximum Torsional Backlash (Standard)	[Arc-min]	--	≤ 5			
Maximum Torsional Backlash (Precision)	[Arc-min]	--	≤ 2			
Noise Level	dB [A]	*6	80			
Ambient Temperature	[°C]	--	-30 to +40			
Permitted Housing Temperature	[°C]	--	+80			
Protection Class	--	--	IP65			
Lubrication	--	--	Synthetic Oil			
Service Life	[Hours]	--	25,000			
Weight	[kg]	*7	369.68			

*1) Higher output torque is available at reduced speed. Contact us if you need to operate outside of these parameters

*2) Input torque with no load applied to the output shaft at 2,000 rpm

*3) The maximum radial load the gearbox can accept

*4) The maximum axial load the gearbox can accept

*5) The efficiency at the nominal output torque and input speed rating

*6) Measured with no load applied to the output shaft at 3,000 rpm and 1 meter distance

*7) Weight may vary slightly between models

EJL Dimensions – Hollow Output Shaft with Keyway

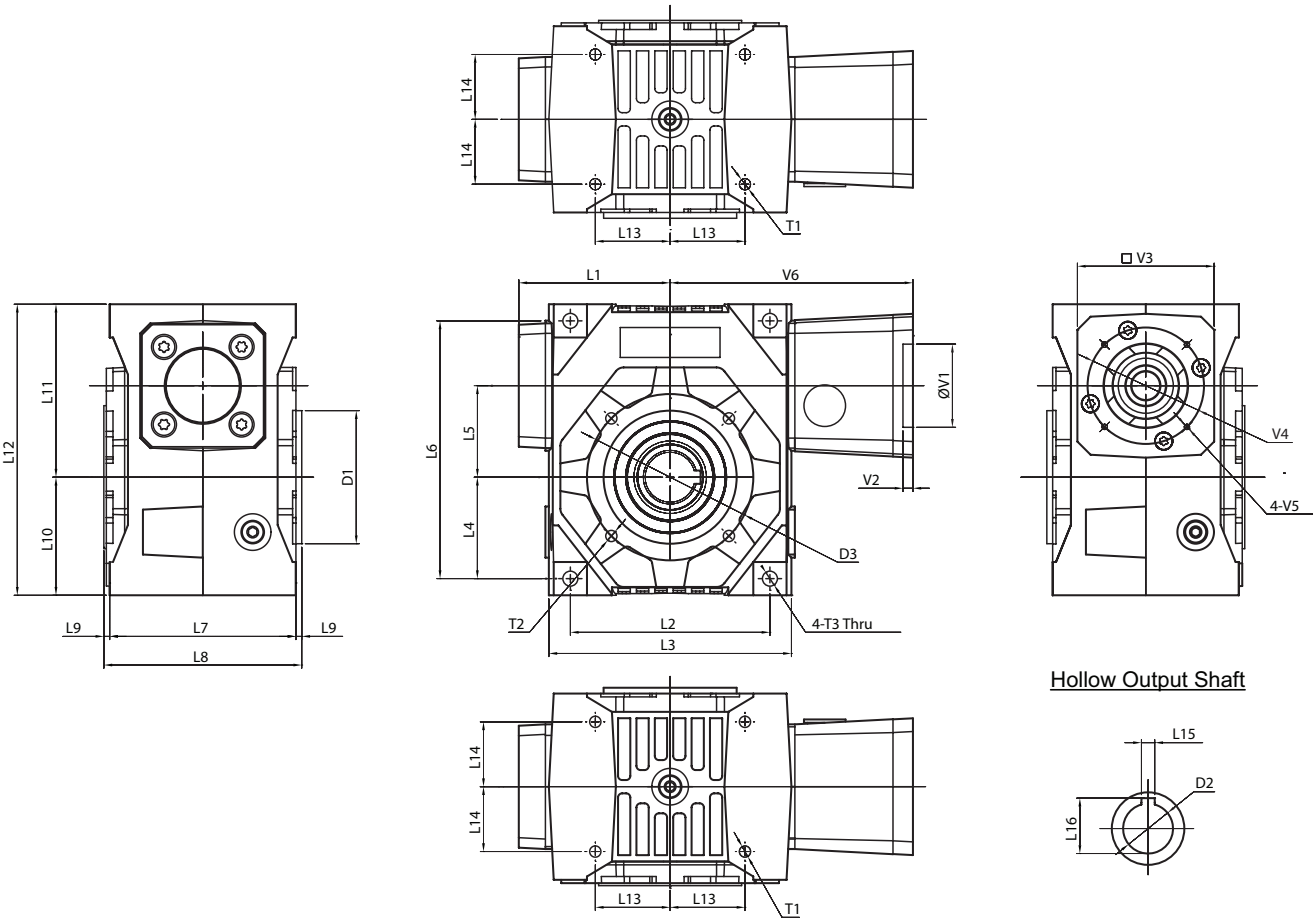

Frame Size	Unit	EJL25	EJL35	EJL45	EJL55
L1	[mm]	49	70	83.5	91
L2	[mm]	66	86	108	120
L3	[mm]	82	107	132	146
L4	[mm]	33	44.5	53	61
L5	[mm]	25	35	45	55
L6	[mm]	84	110	135	155
L7	[mm]	64	86	100	112
L8	[mm]	70	92	106	119
L9	[mm]	3	3	3	3.5
L10	[mm]	39	52.5	62	71
L11	[mm]	57	73.5	91	104
L12	[mm]	96	126	153	175
L13	[mm]	24.75	31	40.5	45
L14	[mm]	22	28	34	39
L15	[mm]	5	5	8	8
L16	[mm]	16.3	18.3	28.3	33.3
D1 (j7)	[mm]	55	50	70	80
D2 (H7)	[mm]	14	16	25	30
D3	[mm]	65	65	85	100
T1	[mm]	4-M5	4-M6	4-M8	4-M8
T2	[mm]	4-M5	4-M6	4-M8	4-M8
T3	[mm]	6.2	7	9	9
V1 ~ V6	Motor attachment dimensions are made to fit your servo motor.				

EJL Dimensions – Hollow Output Shaft with Keyway

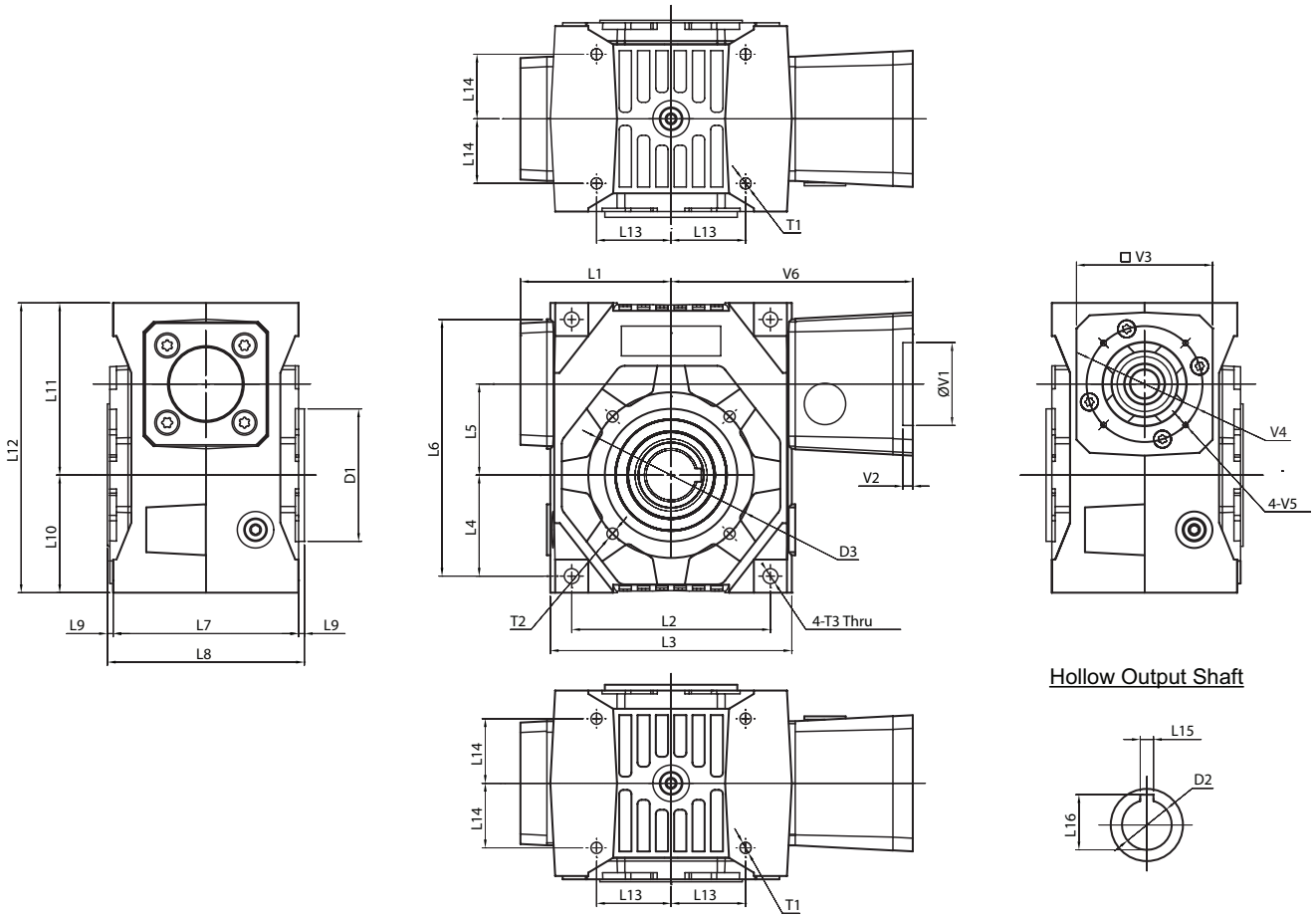

Frame Size	Unit	EJL63	EJL75	EJL90	EJL110
L1	[mm]	101	124	136.5	152
L2	[mm]	134	172	186	220
L3	[mm]	165	204	225	260
L4	[mm]	66	82	91	108
L5	[mm]	63	75	90	110
L6	[mm]	173	208	234	276
L7	[mm]	127	148	170	182
L8	[mm]	134	156	178	192
L9	[mm]	3.5	4	4	5
L10	[mm]	78	94	106	123
L11	[mm]	119	138	158	183
L12	[mm]	197	232	264	306
L13	[mm]	49	68	70.5	87.5
L14	[mm]	45.5	55	65	70
L15	[mm]	10	12	14	18
L16	[mm]	38.3	43.3	53.8	64.4
D1 (j7)	[mm]	95	110	130	165
D2 (H7)	[mm]	35	40	50	60
D3	[mm]	115	130	165	200
T1	[mm]	4-M10	4-M10	4-M12	8-M12
T2	[mm]	4-M10	4-M10	4-M12	8-M12
T3	[mm]	11	11	13	13
V1 ~ V6	Motor attachment dimensions are made to fit your servo motor.				

EJL Dimensions – Shrink Disc Hollow Output Shaft

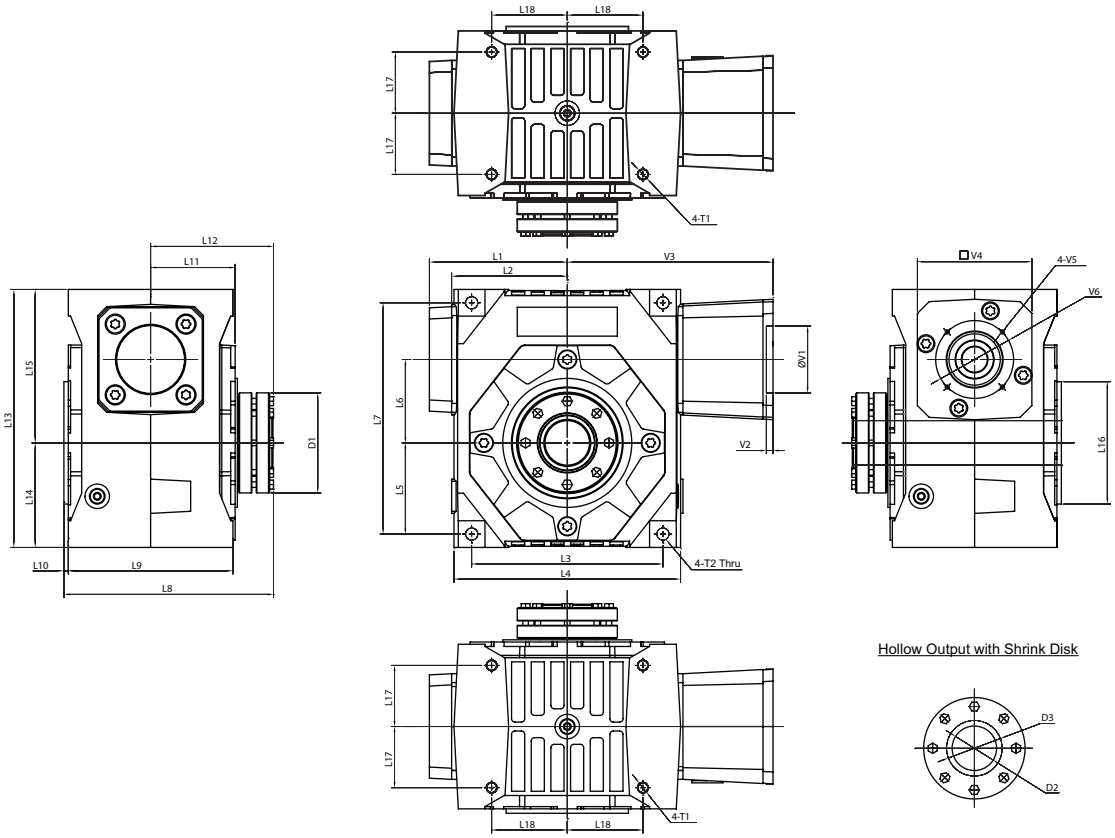

Frame Size	Unit	EJL35	EJL45	EJL55	EJL63	EJL75	EJL90	EJL110
L1	[mm]	70	83.5	91	101	124	136.5	152
L2	[mm]	55	67.5	75	84	104	114.5	132
L3	[mm]	86	108	120	134	172	186	220
L4	[mm]	107	132	146	165	204	225	260
L5	[mm]	44.5	53	61	66	82	91	108
L6	[mm]	35	45	55	63	75	90	110
L7	[mm]	110	135	155	173	208	234	276
L8	[mm]	117	132	150	165	188	213	229
L9	[mm]	86	100	112	127	148	170	182
L10	[mm]	3	3	3.5	3.5	4	4	5
L11	[mm]	45	52	58	65.5	76	88	94
L12	[mm]	70.5	79.5	90.5	98	110	124	133
L13	[mm]	126	153	175	197	232	264	306
L14	[mm]	52.5	62	71	78	94	106	123
L15	[mm]	73.5	91	104	119	138	158	183
L16	[mm]	50	70	80	95	110	130	165
L17	[mm]	28	34	39	45.5	55	65	70
L18	[mm]	31	40.5	45	49	68	70.5	87.5
D1	[mm]	50	60	72	80	90	115	145
D2 (H7)	[mm]	20	25	30	35	40	50	60
D3	[mm]	24	30	36	44	50	68	80
T1	[mm]	M6	M8	M8	M10	M10	M12	M12
T2	[mm]	7	9	9	11	11	13	13
V1 ~ V6	Motor attachment dimensions are made to fit your servo motor.							

EJL Dimensions – Shrink Disc Hollow Output Shaft

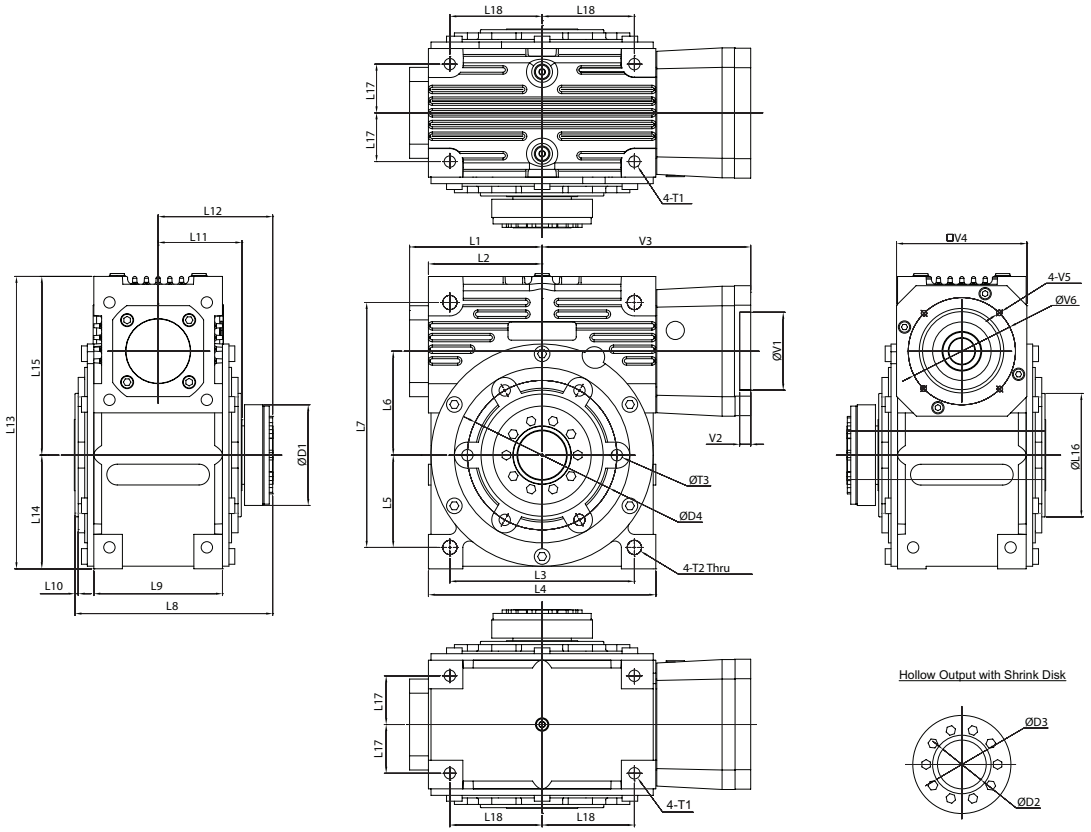

Frame Size	Unit	EJL125	EJL160	EJL200
L1	[mm]	163	204	251
L2	[mm]	135	175	216
L3	[mm]	214	284	342.5
L4	[mm]	270	346	432
L5	[mm]	107	142	171
L6	[mm]	125	160	200
L7	[mm]	302	377	483
L8	[mm]	274	305	456
L9	[mm]	180	198	288
L10	[mm]	4	5	5
L11	[mm]	117	129	192
L12	[mm]	157	177	264
L13	[mm]	360	450	576
L14	[mm]	135	175	216
L15	[mm]	225	275	360
L16	[mm]	160	190	250
L17	[mm]	70	75	112
L18	[mm]	107	142	171.25
D1	[mm]	145	155	230
D2 (H7)	[mm]	65	75	100
D3	[mm]	80	90	140
D4	[mm]	185	230	300
T1	[mm]	M16	M20	M20
T2	[mm]	17	22	28
T3	[mm]	6-M16	6-M20	8-M20
V1 ~ V6	Motor attachment dimensions are made to fit your servo motor.			

EJL Dimensions – Solid Output Shaft - Single and Double

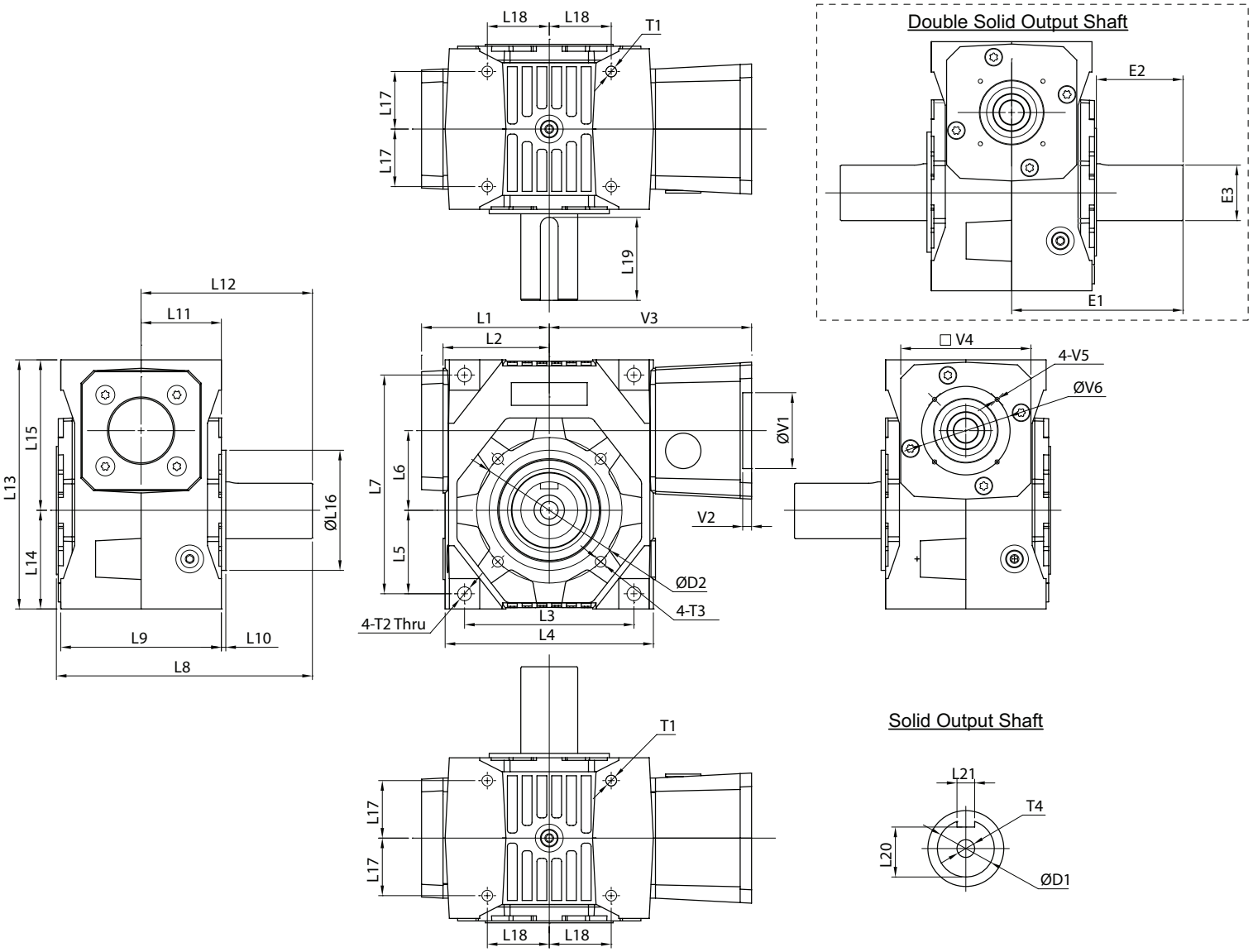

Frame Size	Unit	EJL35	EJL45	EJL55	EJL63	EJL75	EJL90	EJL110
L1	[mm]	70	83.5	91	101	124	136.5	152
L2	[mm]	55	67.5	75	84	104	114.5	132
L3	[mm]	86	108	120	134	172	186	220
L4	[mm]	107	132	146	165	204	225	260
L5	[mm]	44.5	53	61	66	82	91	108
L6	[mm]	35	45	55	63	75	90	110
L7	[mm]	110	135	155	173	208	234	276
L8	[mm]	129	160	178	203	229	276	304
L9	[mm]	86	100	112	127	148	170	182
L10	[mm]	3.0	3.0	3.5	3.5	4	4	5
L11	[mm]	45	50	58	63.5	74	85	91
L12	[mm]	83	107	118	135.5	151	187	208
L13	[mm]	126	153	175	197	232	264	306
L14	[mm]	52.5	62	71	78	94	106	123
L15	[mm]	73.5	91	104	119	138	158	183

EJL Dimensions – Solid Output Shaft - Single and Double

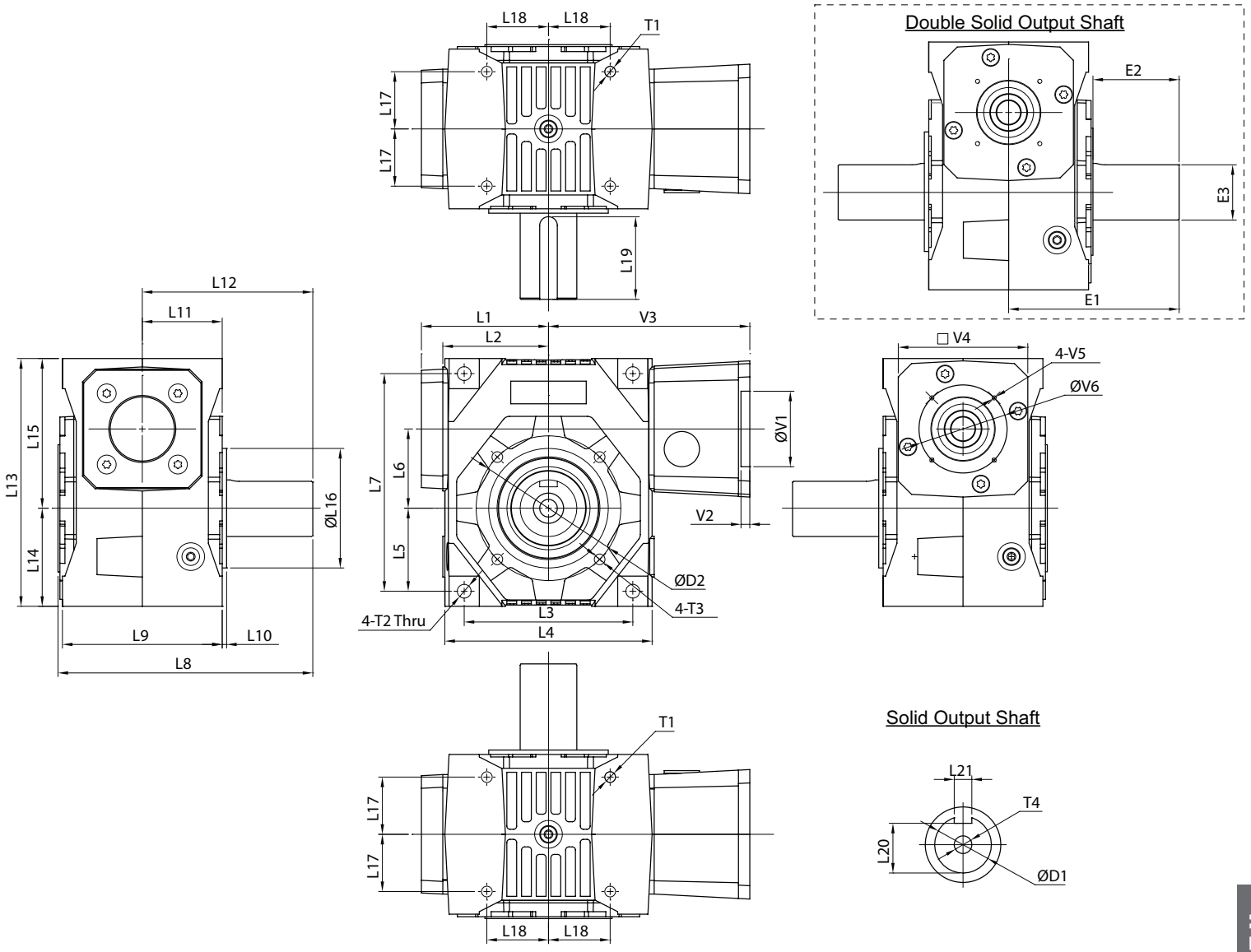

Frame Size	Unit	EJL35	EJL45	EJL55	EJL63	EJL75	EJL90	EJL110
L16 (j7)	[mm]	50	70	80	95	110	130	165
L17	[mm]	28	34	39	45.5	55	65	70
L18	[mm]	31	40.5	45	49	68	70.5	87.5
L19	[mm]	35	50	55	65	70	95.5	110
L20	[mm]	21	30	35	39.5	44.5	58.0	67.5
L21	[mm]	8	10	12	14	14	18	20
D1 (h6)	[mm]	25	35	40	45	50	65	75
D2	[mm]	65	85	100	115	130	165	200
T1	[mm]	M6	M8	M8	M10	M10	M12	M12
T2	[mm]	7	9	9	11	11	13	13
T3	[mm]	M6	M8	M8	M10	4-M10	4-M12	8-M12
T4	[mm]	M10	M12	M16	M16	M16	M20	M20
E1	[mm]	83	107	118	135.5	151	187	208
E2	[mm]	38(*)	55(*)	60(*)	70	75	100	115
E3 (h6)	[mm]	25	35	40	45	50	65	75
V1 ~ V6	Motor attachment dimensions are made to fit your servo motor.							

EJL Dimensions – Solid Output Shaft - Single Only

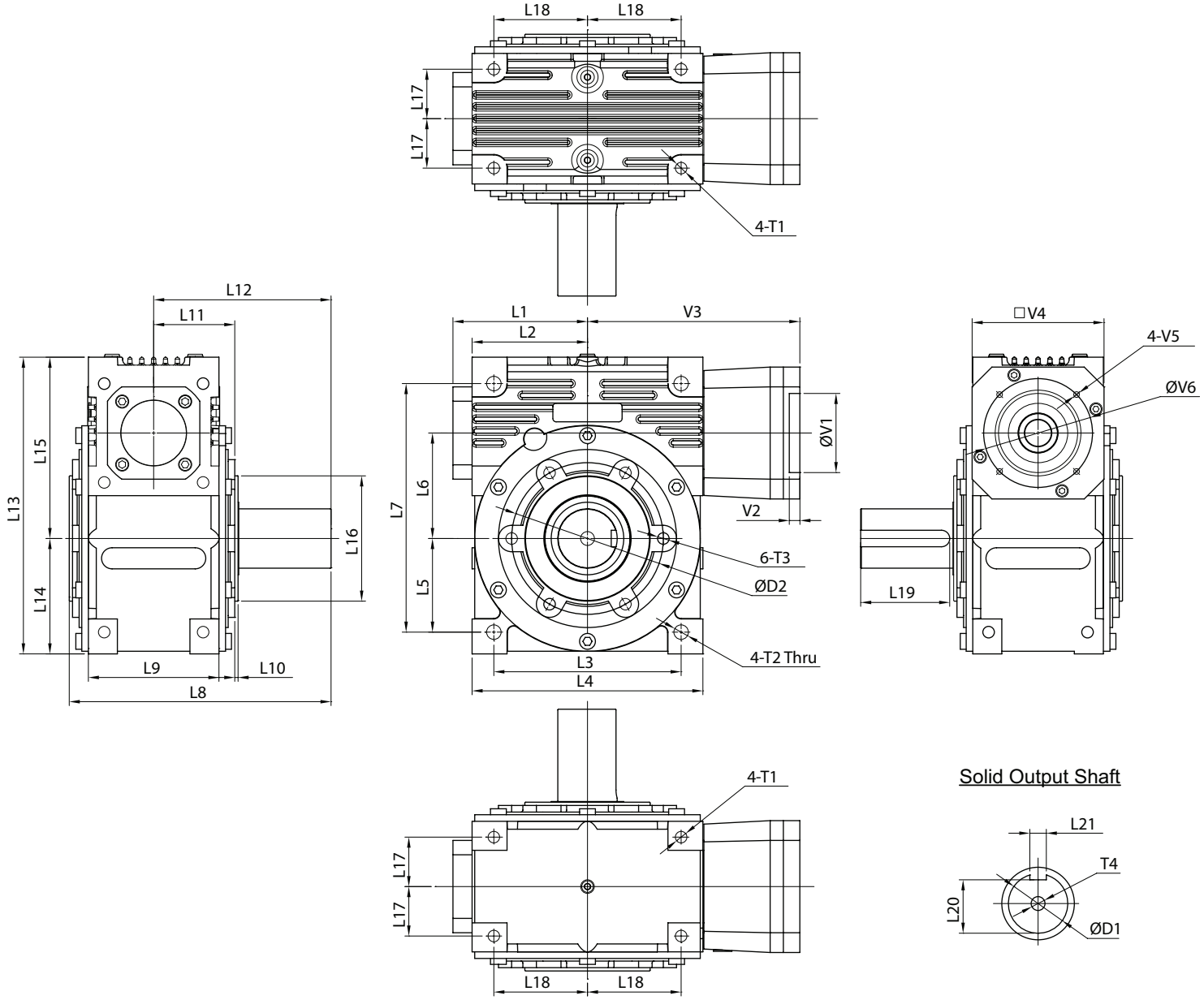

Solid Output Shaft

Frame Size	Unit	EJL125	EJL160	EJL200
L1	[mm]	163	204	251
L2	[mm]	135	175	216
L3	[mm]	214	284	342.5
L4	[mm]	270	350	432
L5	[mm]	107	142	171
L6	[mm]	125	160	200
L7	[mm]	302	377	483
L8	[mm]	348	397	551
L9	[mm]	180	198	288
L10	[mm]	4	5	5
L11	[mm]	111	123	187
L12	[mm]	233	269	359
L13	[mm]	360	450	576
L14	[mm]	135	175	216

EJL Dimensions – Solid Output Shaft - Single Only

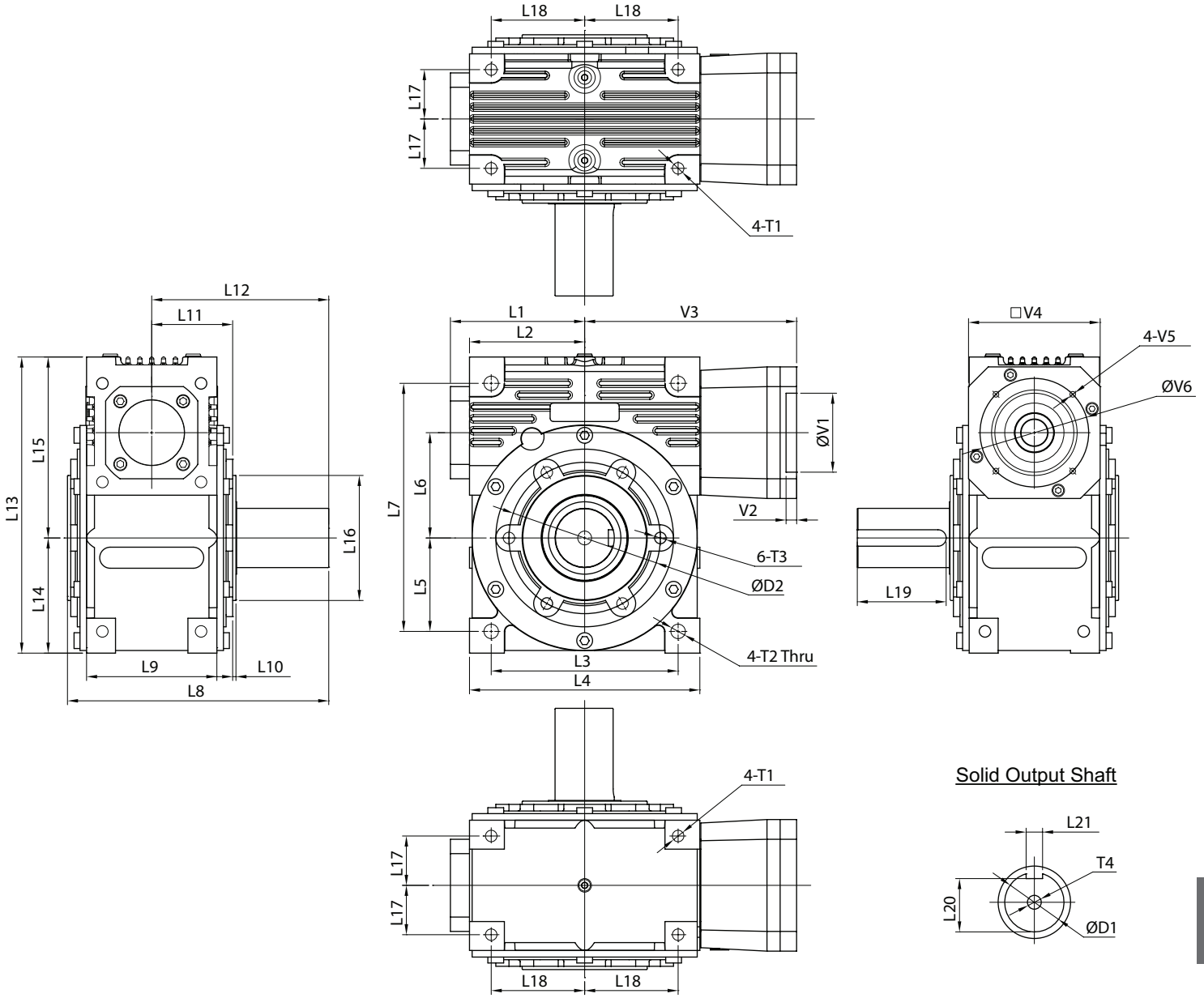

Frame Size	Unit	EJL125	EJL160	EJL200
L15	[mm]	225	275	360
L16 (j7)	[mm]	160	190	250
L17	[mm]	70	75	112
L18	[mm]	107	142	171.25
L19	[mm]	111	135	164
L20	[mm]	67.5	81.0	109.0
L21	[mm]	20.0	25.0	32.0
D1 (h6)	[mm]	75	90	120
D2	[mm]	185	230	300
T1	[mm]	M16	M20	M20
T2	[mm]	17	22	28
T3	[mm]	M16	M20	M20
T4	[mm]	M20	M24	M24
V1 ~ V6	Motor attachment dimensions are made to fit your servo motor.			

EJL Dimensions – Robot Flange

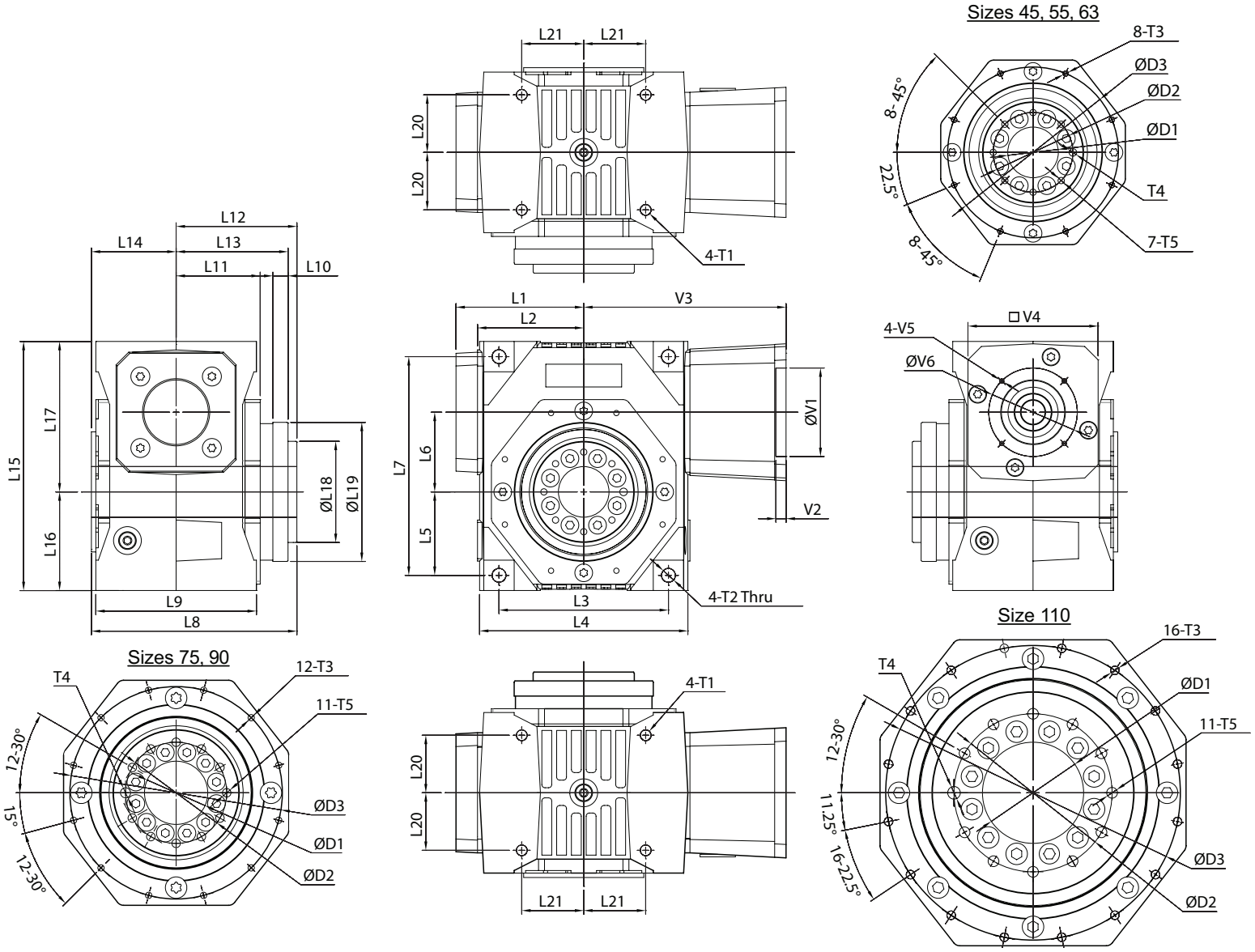

Frame Size	Unit	EJL45	EJL55	EJL63	EJL75	EJL90	EJL110
L1	[mm]	83.5	91.0	101.0	124.0	136.5	152.0
L2	[mm]	67.5	75.0	84.0	104.0	114.5	132.0
L3	[mm]	108	120	134	172	186	220
L4	[mm]	132	146	165	204	225	260
L5	[mm]	53	61	66	82	91	108
L6	[mm]	45	55	63	75	90	110
L7	[mm]	135	155	173	208	234	276
L8	[mm]	133.0	148.5	162.5	195	227	246
L9	[mm]	100	112	127	148	170	182
L10	[mm]	10	12	12	15	18	22
L11	[mm]	54.0	59.0	66.5	79	93	100
L12	[mm]	80.0	89.0	95.5	117	138	150
L13	[mm]	74.0	82.0	88.5	110	129	140
L14	[mm]	53.0	59.5	67.0	78	89	96
L15	[mm]	153	175	197	232	264	306

EJL Dimensions – Robot Flange

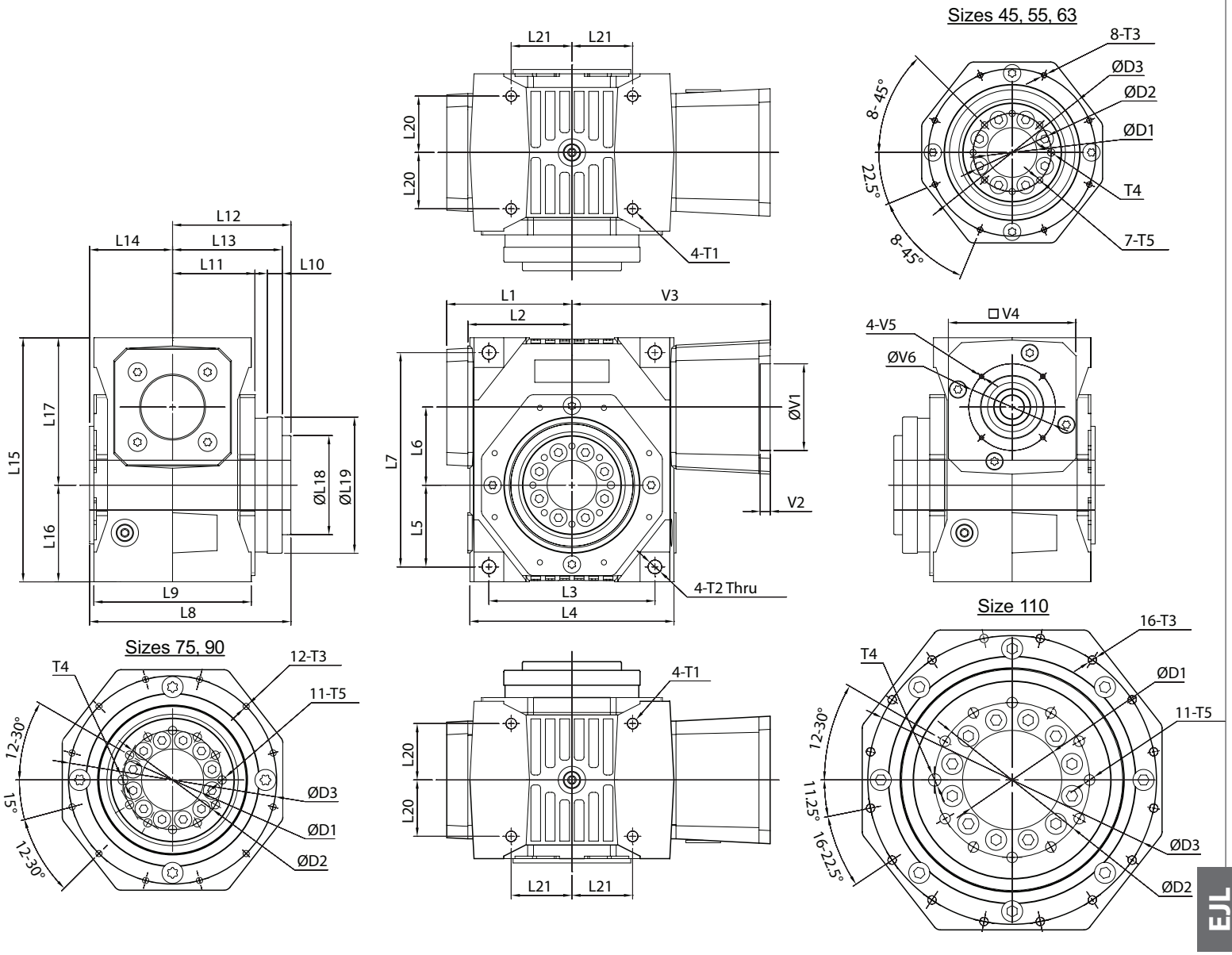

Frame Size	Unit	EJL45	EJL55	EJL63	EJL75	EJL90	EJL110
L16	[mm]	62	71	78	94	106	123
L17	[mm]	91	104	119	138	158	183
L18 (h7)	[mm]	50	63	80	100	125	160
L19 (h7)	[mm]	80	90	110	140	165	200
L20	[mm]	34.0	39.0	45.5	55	65	70
L21	[mm]	40.5	45.0	49.0	68	71	88
D1 (H7)	[mm]	25.0	31.5	40.0	50	63	80
D2	[mm]	40	50	63	80	100	125
D3	[mm]	100	109	135	168	190	233
T1	[mm]	M8	M8	M10	M10	M12	M12
T2	[mm]	9	9	11	11	13	13
T3	[mm]	M5-12 Depth	M5-12 Depth	M5-12 Depth	M6-15 Depth	M8-18 Depth	M8-19 Depth
T4 (H7)	[mm]	6	6	6	8	8	10
T5	[mm]	M6-11 Depth	M6-11 Depth	M6-11 Depth	M8-15 Depth	M8-15 Depth	M10-15 Depth
V1 ~ V6	Motor attachment dimensions are made to fit your servo motor.						

EJH SERIES

With its cast iron housing design, the EJH is a rugged, reliable performer for any dynamic servo application. This product is an ideal fit for machine builders transitioning from mechanical or hydraulic systems to all-electric servo drives. Unlike traditional worm gearboxes out on the market, the EJH utilizes a globoidal gear mesh, resulting in 300% shock load capacity and a quiet, smooth running drive.

With torque capability up to 7800 in. lb. and backlash as low as 6 arc-min, the EJH is well suited for metals, plastics or rubber processing machinery applications requiring a robust, compact solution. Nidec Drive Technology Corporation can customize this product to fit your needs by offering a variety of solid shaft, hollow shaft or shrink disc output mounting options.

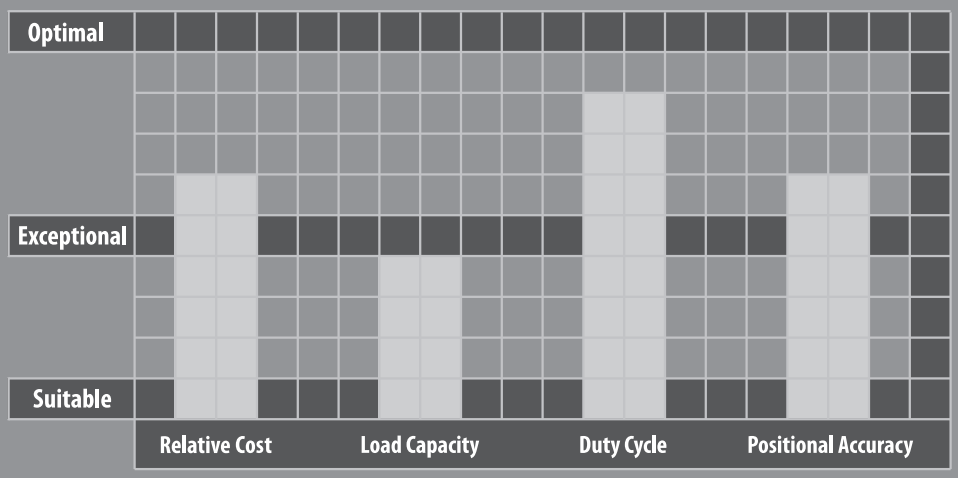

EJH SERIES

- Compact design – exact reduction ratios from 5:1 – 60:1 available in a single stage
- Mid-range performance with backlash as low as 6 arc-min
- Robust cast iron housing design for heavy industry applications
- Five frame sizes to choose from with nominal output torque up to 475Nm

EJH Series Features

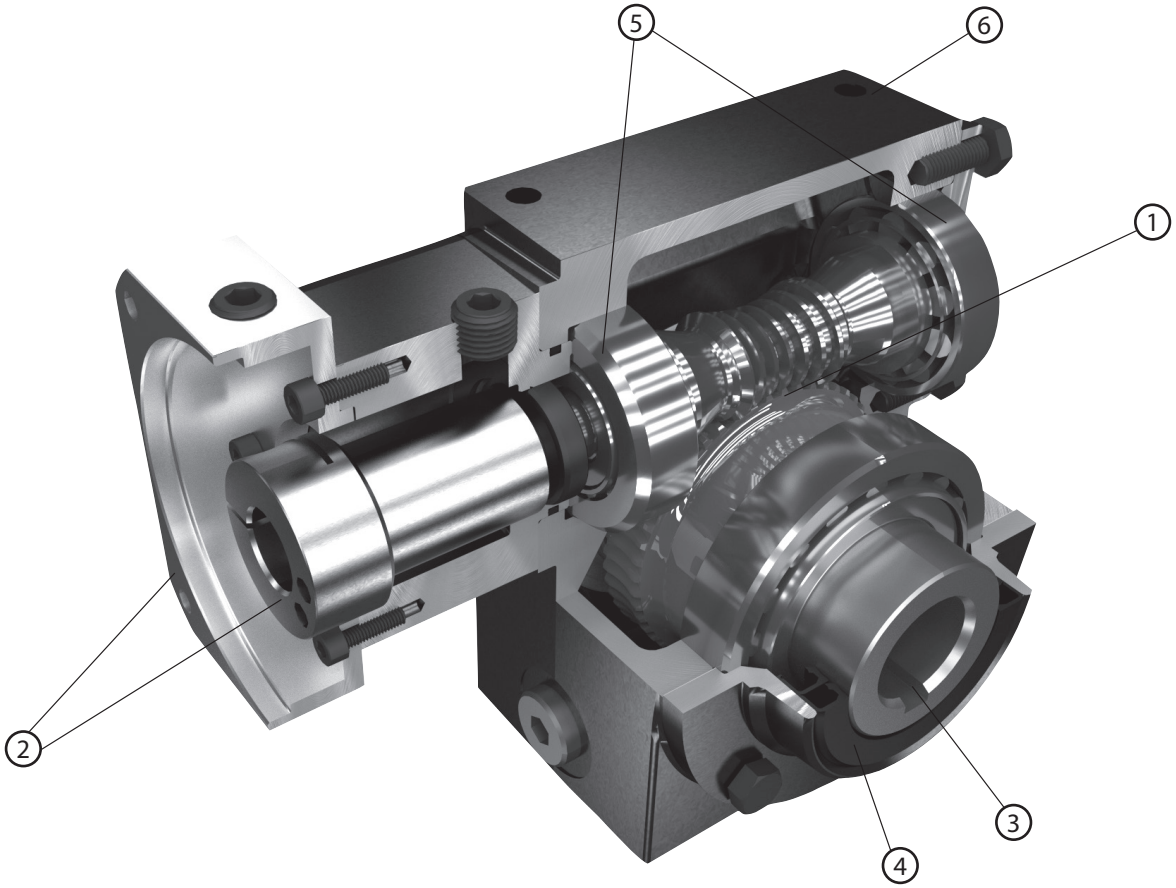

1. Globoidal gear set – between 3-8 teeth in contact at once, allowing 300% shock load capacity
2. Adapter–bushing connection allows simple mounting to virtually any servomotor manufacturer
3. Wide range of output mounting styles available—hollow shaft, solid shaft, flange mount, shrink disc
4. Double oil seal and o-ring provide IP65 protection
5. Tapered roller bearings provide high radial and thrust load capability
6. Cast iron housing for improved durability in heavy industrial applications

EJH Series Model Code

EJH – 015 – 25 – H0 – 0 – 19HB16

- 19HB16: *Motor mounting code
- 0: Backlash:
  - 0: Standard Backlash
  - L: Low Backlash
- H0: Output mounting style:
  - H0: Keyed Hollow Shaft
  - SR: Keyed Solid Shaft Right
  - SL: Keyed Solid Shaft Left
  - SW: Keyed Dual Solid Shaft
  - DR: Hollow Shrink Disc Right
  - DL: Hollow Shrink Disc Left
- 25: Ratio: 5, 6, 7, 8, 9, 10, 15, 20, 25, 30, 40, 50, 60
- 015: Frame size: 015, 020, 025, 030, 035
- EJH: Series

* Motor mounting code varies depending on the motor. Contact us to configure the code.

EJH 015 1-Stage Specifications

Frame Size	**015**								
Ratio	Unit	Note	5	6	7	8	9	10	15
Nominal Output Torque	[Nm]	--	35	---	---	---	---	47	48
Maximum Acceleration Torque	[Nm]	--	46	---	---	---	---	59	61
Emergency Stop Torque	[Nm]	--	183	---	---	---	---	217	216
No Load Running Torque	[Nm]	*1	0.51						
Nominal Input Speed	[rpm]	--	2,000						
Maximum Continuous Input Speed	[rpm]	--	4,000						
Maximum Cyclic Input Speed	[rpm]	--	4,000						
Maximum Radial Load	[N]	*2	3,110						
Maximum Axial Load	[N]	*3	1,780						
Moment of Inertia (≤ Ø14)	[kgcm2]	--	0.75	---	---	---	---	0.59	0.56
Moment of Inertia (≤ Ø19)	[kgcm2]	--	0.95	---	---	---	---	0.79	0.76
Moment of Inertia (≤ Ø28)	[kgcm2]	--	2.13	---	---	---	---	1.97	1.94
Efficiency	[%]	*4	88	---	---	---	---	86	84
Torsional Rigidity	[Nm/arcmin]	--	10.3						
Maximum Torsional Backlash (Standard)	[Arc-min]	--	≤ 32						
Maximum Torsional Backlash (Low)	[Arc-min]	--	≤ 15						
Noise Level	dB [A]	*5	≤ 73						
Ambient Temperature	[°C]	--	-25 ~ 100						
Permitted Housing Temperature	[°C]	--	100						
Protection Class	--	--	IP65						
Lubrication	--	--	Synthetic Oil						
Service Life	[Hours]	--	25,000						
Weight	[kg]	*6	7						

*1) Torque at no load applied to the input shaft at 2,000 rpm

*2) The maximum radial load the gearbox can accept

*3) The maximum axial load the gearbox can accept

*4) The efficiency at the nominal output torque rating

*5) Measured with no load applied to the input shaft at 2,000 rpm

*6) Weight may vary slightly between models

EJH 015 1-Stage Specifications

Frame Size	015							
Ratio	Unit	Note	20	25	30	40	50	60
Nominal Output Torque	[Nm]	--	48	---	46	42	41	38
Maximum Acceleration Torque	[Nm]	--	59	---	57	52	51	48
Emergency Stop Torque	[Nm]	--	209	---	192	148	150	128
No Load Running Torque	[Nm]	*1	0.51					
Nominal Input Speed	[rpm]	--	2,000					
Maximum Continuous Input Speed	[rpm]	--	4,000					
Maximum Cyclic Input Speed	[rpm]	--	4,000					
Maximum Radial Load	[N]	*2	3,110					
Maximum Axial Load	[N]	*3	1,780					
Moment of Inertia (≤ Ø14)	[kgcm2]	--	0.54	---	0.54	0.53	0.53	0.53
Moment of Inertia (≤ Ø19)	[kgcm2]	--	0.74	---	0.74	0.73	0.73	0.73
Moment of Inertia (≤ Ø28)	[kgcm2]	--	1.92	---	1.92	1.91	1.91	1.91
Efficiency	[%]	*4	81	---	76	72	69	66
Torsional Rigidity	[Nm/arcmin]	--	10.3					
Maximum Torsional Backlash (Standard)	[Arc-min]	--	≤ 32					
Maximum Torsional Backlash (Low)	[Arc-min]	--	≤ 15					
Noise Level	dB [A]	*5	≤ 73					
Ambient Temperature	[°C]	--	-25 ~ 100					
Permitted Housing Temperature	[°C]	--	100					
Protection Class	--	--	IP65					
Lubrication	--	--	Synthetic Oil					
Service Life	[Hours]	--	25,000					
Weight	[kg]	*6	7					

*1) Torque at no load applied to the input shaft at 2,000 rpm

*2) The maximum radial load the gearbox can accept

*3) The maximum axial load the gearbox can accept

*4) The efficiency at the nominal output torque rating

*5) Measured with no load applied to the input shaft at 2,000 rpm

*6) Weight may vary slightly between models

EJH 020 1-Stage Specifications

Frame Size	**020**								
Ratio	Unit	Note	5	6	7	8	9	10	15
Nominal Output Torque	[Nm]	--	67	73	78	82	84	86	89
Maximum Acceleration Torque	[Nm]	--	90	99	105	111	113	115	120
Emergency Stop Torque	[Nm]	--	384	407	429	441	441	441	452
No Load Running Torque	[Nm]	*1	1.61						
Nominal Input Speed	[rpm]	--	2,000						
Maximum Continuous Input Speed	[rpm]	--	4,000						
Maximum Cyclic Input Speed	[rpm]	--	4,000						
Maximum Radial Load	[N]	*2	6,670						
Maximum Axial Load	[N]	*3	1,820						
Moment of Inertia (≤ Ø14)	[kgcm2]	--	1.52	1.28	1.14	1.04	0.98	0.94	0.83
Moment of Inertia (≤ Ø19)	[kgcm2]	--	1.72	1.48	1.34	1.24	1.18	1.14	1.03
Moment of Inertia (≤ Ø28)	[kgcm2]	--	2.89	2.66	2.52	2.42	2.36	2.31	2.21
Efficiency	[%]	*4	92	91	91	91	90	90	88
Torsional Rigidity	[Nm/arcmin]	--	17.8						
Maximum Torsional Backlash (Standard)	[Arc-min]	--	≤ 24						
Maximum Torsional Backlash (Low)	[Arc-min]	--	≤ 11						
Noise Level	dB [A]	*5	≤ 75						
Ambient Temperature	[°C]	--	-25 ~ 100						
Permitted Housing Temperature	[°C]	--	100						
Protection Class	--	--	IP65						
Lubrication	--	--	Synthetic Oil						
Service Life	[Hours]	--	25,000						
Weight	[kg]	*6	12						

*1) Torque at no load applied to the input shaft at 2,000 rpm

*2) The maximum radial load the gearbox can accept

*3) The maximum axial load the gearbox can accept

*4) The efficiency at the nominal output torque rating

*5) Measured with no load applied to the input shaft at 2,000 rpm

*6) Weight may vary slightly between models

EJH 020 1-Stage Specifications

Frame Size	020							
Ratio	Unit	Note	20	25	30	40	50	60
Nominal Output Torque	[Nm]	--	89	88	85	81	78	75
Maximum Acceleration Torque	[Nm]	--	116	116	112	106	102	98
Emergency Stop Torque	[Nm]	--	418	418	395	362	305	294
No Load Running Torque	[Nm]	*1	1.61					
Nominal Input Speed	[rpm]	--	2,000					
Maximum Continuous Input Speed	[rpm]	--	4,000					
Maximum Cyclic Input Speed	[rpm]	--	4,000					
Maximum Radial Load	[N]	*2	6,670					
Maximum Axial Load	[N]	*3	1,820					
Moment of Inertia (≤ Ø14)	[kgcm2]	--	0.79	0.77	0.76	0.75	0.75	0.75
Moment of Inertia (≤ Ø19)	[kgcm2]	--	0.99	0.97	0.96	0.95	0.95	0.95
Moment of Inertia (≤ Ø28)	[kgcm2]	--	2.17	2.15	2.14	2.13	2.13	2.13
Efficiency	[%]	*4	85	84	80	76	73	70
Torsional Rigidity	[Nm/arcmin]	--	17.8					
Maximum Torsional Backlash (Standard)	[Arc-min]	--	≤ 24					
Maximum Torsional Backlash (Low)	[Arc-min]	--	≤ 11					
Noise Level	dB [A]	*5	≤ 75					
Ambient Temperature	[°C]	--	-25 ~ 100					
Permitted Housing Temperature	[°C]	--	100					
Protection Class	--	--	IP65					
Lubrication	--	--	Synthetic Oil					
Service Life	[Hours]	--	25,000					
Weight	[kg]	*6	12					

*1) Torque at no load applied to the input shaft at 2,000 rpm

*2) The maximum radial load the gearbox can accept

*3) The maximum axial load the gearbox can accept

*4) The efficiency at the nominal output torque rating

*5) Measured with no load applied to the input shaft at 2,000 rpm

*6) Weight may vary slightly between models

EJH 025 1-Stage Specifications

Frame Size	**025**								
Ratio	Unit	Note	5	6	7	8	9	10	15
Nominal Output Torque	[Nm]	--	120	133	140	148	151	155	161
Maximum Acceleration Torque	[Nm]	--	167	184	194	205	209	214	222
Emergency Stop Torque	[Nm]	--	746	802	825	859	870	881	881
No Load Running Torque	[Nm]	*1	2.72						
Nominal Input Speed	[rpm]	--	2,000						
Maximum Continuous Input Speed	[rpm]	--	4,000						
Maximum Cyclic Input Speed	[rpm]	--	4,000						
Maximum Radial Load	[N]	*2	8,890						
Maximum Axial Load	[N]	*3	1,860						
Moment of Inertia (≤ Ø19)	[kgcm2]	--	5.42	4.66	4.20	3.90	3.69	3.54	3.20
Moment of Inertia (≤ Ø28)	[kgcm2]	--	6.24	5.48	5.02	4.72	4.51	4.36	4.02
Moment of Inertia (≤ Ø38)	[kgcm2]	--	11.8	11.1	10.6	10.3	10.1	9.94	9.60
Efficiency	[%]	*4	92	92	91	91	90	90	88
Torsional Rigidity	[Nm/arcmin]	--	23.1						
Maximum Torsional Backlash (Standard)	[Arc-min]	--	≤ 19						
Maximum Torsional Backlash (Low)	[Arc-min]	--	≤ 9						
Noise Level	dB [A]	*5	≤ 80						
Ambient Temperature	[°C]	--	-25 ~ 100						
Permitted Housing Temperature	[°C]	--	100						
Protection Class	--	--	IP65						
Lubrication	--	--	Synthetic Oil						
Service Life	[Hours]	--	25,000						
Weight	[kg]	*6	20						

*1) Torque at no load applied to the input shaft at 2,000 rpm

*2) The maximum radial load the gearbox can accept

*3) The maximum axial load the gearbox can accept

*4) The efficiency at the nominal output torque rating

*5) Measured with no load applied to the input shaft at 2,000 rpm

*6) Weight may vary slightly between models

EJH 025 1-Stage Specifications

Frame Size	**025**							
Ratio	Unit	Note	20	25	30	40	50	60
Nominal Output Torque	[Nm]	--	159	159	152	145	140	134
Maximum Acceleration Torque	[Nm]	--	217	217	208	198	191	183
Emergency Stop Torque	[Nm]	--	847	791	780	678	621	610
No Load Running Torque	[Nm]	*1	2.72					
Nominal Input Speed	[rpm]	--	2,000					
Maximum Continuous Input Speed	[rpm]	--	4,000					
Maximum Cyclic Input Speed	[rpm]	--	4,000					
Maximum Radial Load	[N]	*2	8,890					
Maximum Axial Load	[N]	*3	1,860					
Moment of Inertia (≤ Ø19)	[kgcm2]	--	3.07	3.02	2.99	2.96	2.94	2.93
Moment of Inertia (≤ Ø28)	[kgcm2]	--	3.89	3.84	3.81	3.78	3.76	3.75
Moment of Inertia (≤ Ø38)	[kgcm2]	--	9.47	9.42	9.39	9.36	9.34	9.33
Efficiency	[%]	*4	85	84	80	76	73	70
Torsional Rigidity	[Nm/arcmin]	--	23.1					
Maximum Torsional Backlash (Standard)	[Arc-min]	--	≤ 19					
Maximum Torsional Backlash (Low)	[Arc-min]	--	≤ 9					
Noise Level	dB [A]	*5	≤ 80					
Ambient Temperature	[°C]	--	-25 ~ 100					
Permitted Housing Temperature	[°C]	--	100					
Protection Class	--	--	IP65					
Lubrication	--	--	Synthetic Oil					
Service Life	[Hours]	--	25,000					
Weight	[kg]	*6	20					

*1) Torque at no load applied to the input shaft at 2,000 rpm

*2) The maximum radial load the gearbox can accept

*3) The maximum axial load the gearbox can accept

*4) The efficiency at the nominal output torque rating

*5) Measured with no load applied to the input shaft at 2,000 rpm

*6) Weight may vary slightly between models

EJH 030 1-Stage Specifications

Frame Size	**030**								
Ratio	Unit	Note	5	6	7	8	9	10	15
Nominal Output Torque	[Nm]	--	196	219	233	248	255	264	275
Maximum Acceleration Torque	[Nm]	--	275	306	324	345	355	367	381
Emergency Stop Torque	[Nm]	--	1,311	1,424	1,480	1,548	1,548	1,559	1,570
No Load Running Torque	[Nm]	*1	3.46						
Nominal Input Speed	[rpm]	--	2,000						
Maximum Continuous Input Speed	[rpm]	--	4,000						
Maximum Cyclic Input Speed	[rpm]	--	4,000						
Maximum Radial Load	[N]	*2	11,110						
Maximum Axial Load	[N]	*3	4,220						
Moment of Inertia (≤ Ø19)	[kgcm2]	--	13.3	11.1	9.80	8.94	8.35	7.92	6.92
Moment of Inertia (≤ Ø28)	[kgcm2]	--	16.2	14.0	12.7	11.8	11.2	10.8	9.78
Moment of Inertia (≤ Ø38)	[kgcm2]	--	19.9	17.7	16.3	15.5	14.9	14.5	13.5
Efficiency	[%]	*4	92	92	91	91	90	89	88
Torsional Rigidity	[Nm/arcmin]	--	41.6						
Maximum Torsional Backlash (Standard)	[Arc-min]	--	≤ 16						
Maximum Torsional Backlash (Low)	[Arc-min]	--	≤ 7						
Noise Level	dB [A]	*5	≤ 80						
Ambient Temperature	[°C]	--	-25 ~ 100						
Permitted Housing Temperature	[°C]	--	100						
Protection Class	--	--	IP65						
Lubrication	--	--	Synthetic Oil						
Service Life	[Hours]	--	25,000						
Weight	[kg]	*6	35						

*1) Torque at no load applied to the input shaft at 2,000 rpm

*2) The maximum radial load the gearbox can accept

*3) The maximum axial load the gearbox can accept

*4) The efficiency at the nominal output torque rating

*5) Measured with no load applied to the input shaft at 2,000 rpm

*6) Weight may vary slightly between models

EJH 030 1-Stage Specifications

Frame Size	**030**							
Ratio	Unit	Note	20	25	30	40	50	60
Nominal Output Torque	[Nm]	--	272	272	260	248	239	230
Maximum Acceleration Torque	[Nm]	--	373	373	357	341	328	315
Emergency Stop Torque	[Nm]	--	1,503	1,435	1,390	1,254	1,096	1,085
No Load Running Torque	[Nm]	*1	3.46					
Nominal Input Speed	[rpm]	--	2,000					
Maximum Continuous Input Speed	[rpm]	--	4,000					
Maximum Cyclic Input Speed	[rpm]	--	4,000					
Maximum Radial Load	[N]	*2	11,110					
Maximum Axial Load	[N]	*3	4,220					
Moment of Inertia (≤ Ø19)	[kgcm2]	--	6.57	6.41	6.32	6.24	6.19	6.17
Moment of Inertia (≤ Ø28)	[kgcm2]	--	9.43	9.27	9.18	9.10	9.05	9.03
Moment of Inertia (≤ Ø38)	[kgcm2]	--	13.1	13.0	12.9	12.8	12.7	12.7
Efficiency	[%]	*4	85	84	80	76	73	70
Torsional Rigidity	[Nm/arcmin]	--	41.6					
Maximum Torsional Backlash (Standard)	[Arc-min]	--	≤ 16					
Maximum Torsional Backlash (Low)	[Arc-min]	--	≤ 7					
Noise Level	dB [A]	*5	≤ 80					
Ambient Temperature	[°C]	--	-25 ~ 100					
Permitted Housing Temperature	[°C]	--	100					
Protection Class	--	--	IP65					
Lubrication	--	--	Synthetic Oil					
Service Life	[Hours]	--	25,000					
Weight	[kg]	*6	35					

*1) Torque at no load applied to the input shaft at 2,000 rpm

*2) The maximum radial load the gearbox can accept

*3) The maximum axial load the gearbox can accept

*4) The efficiency at the nominal output torque rating

*5) Measured with no load applied to the input shaft at 2,000 rpm

*6) Weight may vary slightly between models

EJH 035 1-Stage Specifications

Frame Size	**035**								
Ratio	Unit	Note	5	6	7	8	9	10	15
Nominal Output Torque	[Nm]	--	341	381	404	430	442	456	475
Maximum Acceleration Torque	[Nm]	--	480	537	568	604	619	638	663
Emergency Stop Torque	[Nm]	--	2,423	2,644	2,731	2,845	2,864	2,889	2,885
No Load Running Torque	[Nm]	*1	4.20						
Nominal Input Speed	[rpm]	--	2,000						
Maximum Continuous Input Speed	[rpm]	--	4,000						
Maximum Cyclic Input Speed	[rpm]	--	4,000						
Maximum Radial Load	[N]	*2	15,560						
Maximum Axial Load	[N]	*3	4,000						
Moment of Inertia (≤ Ø19)	[kgcm2]	--	28.3	23.9	21.2	19.5	18.3	17.4	15.4
Moment of Inertia (≤ Ø28)	[kgcm2]	--	32.3	27.8	25.2	23.4	22.2	21.4	19.4
Moment of Inertia (≤ Ø38)	[kgcm2]	--	36.9	32.5	29.8	28.1	26.9	26.0	24.0
Efficiency	[%]	*4	91	91	91	90	90	89	87
Torsional Rigidity	[Nm/arcmin]	--	79.2						
Maximum Torsional Backlash (Standard)	[Arc-min]	--	≤ 15						
Maximum Torsional Backlash (Low)	[Arc-min]	--	≤ 6						
Noise Level	dB [A]	*5	≤ 83						
Ambient Temperature	[°C]	--	-25 ~ 100						
Permitted Housing Temperature	[°C]	--	100						
Protection Class	--	--	IP65						
Lubrication	--	--	Synthetic Oil						
Service Life	[Hours]	--	25,000						
Weight	[kg]	*6	53						

*1) Torque at no load applied to the input shaft at 2,000 rpm

*2) The maximum radial load the gearbox can accept

*3) The maximum axial load the gearbox can accept

*4) The efficiency at the nominal output torque rating

*5) Measured with no load applied to the input shaft at 2,000 rpm

*6) Weight may vary slightly between models

EJH 035 1-Stage Specifications

Frame Size	**035**							
Ratio	Unit	Note	20	25	30	40	50	60
Nominal Output Torque	[Nm]	--	471	468	450	429	413	397
Maximum Acceleration Torque	[Nm]	--	649	649	622	593	571	548
Emergency Stop Torque	[Nm]	--	2,819	2,691	2,570	2,293	2,076	2,037
No Load Running Torque	[Nm]	*1	4.20					
Nominal Input Speed	[rpm]	--	2,000					
Maximum Continuous Input Speed	[rpm]	--	4,000					
Maximum Cyclic Input Speed	[rpm]	--	4,000					
Maximum Radial Load	[N]	*2	15,560					
Maximum Axial Load	[N]	*3	4,000					
Moment of Inertia (≤ Ø19)	[kgcm2]	--	14.7	14.4	14.2	14.0	13.9	13.9
Moment of Inertia (≤ Ø28)	[kgcm2]	--	18.7	18.3	18.1	18.0	17.9	17.8
Moment of Inertia (≤ Ø38)	[kgcm2]	--	23.3	23.0	22.8	22.6	22.5	22.5
Efficiency	[%]	*4	84	83	79	75	72	69
Torsional Rigidity	[Nm/arcmin]	--	79.2					
Maximum Torsional Backlash (Standard)	[Arc-min]	--	≤ 15					
Maximum Torsional Backlash (Low)	[Arc-min]	--	≤ 6					
Noise Level	dB [A]	*5	≤ 83					
Ambient Temperature	[°C]	--	-25 ~ 100					
Permitted Housing Temperature	[°C]	--	100					
Protection Class	--	--	IP65					
Lubrication	--	--	Synthetic Oil					
Service Life	[Hours]	--	25,000					
Weight	[kg]	*6	53					

*1) Torque at no load applied to the input shaft at 2,000 rpm

*2) The maximum radial load the gearbox can accept

*3) The maximum axial load the gearbox can accept

*4) The efficiency at the nominal output torque rating

*5) Measured with no load applied to the input shaft at 2,000 rpm

*6) Weight may vary slightly between models

EJH Dimensions – Hollow Output Shaft

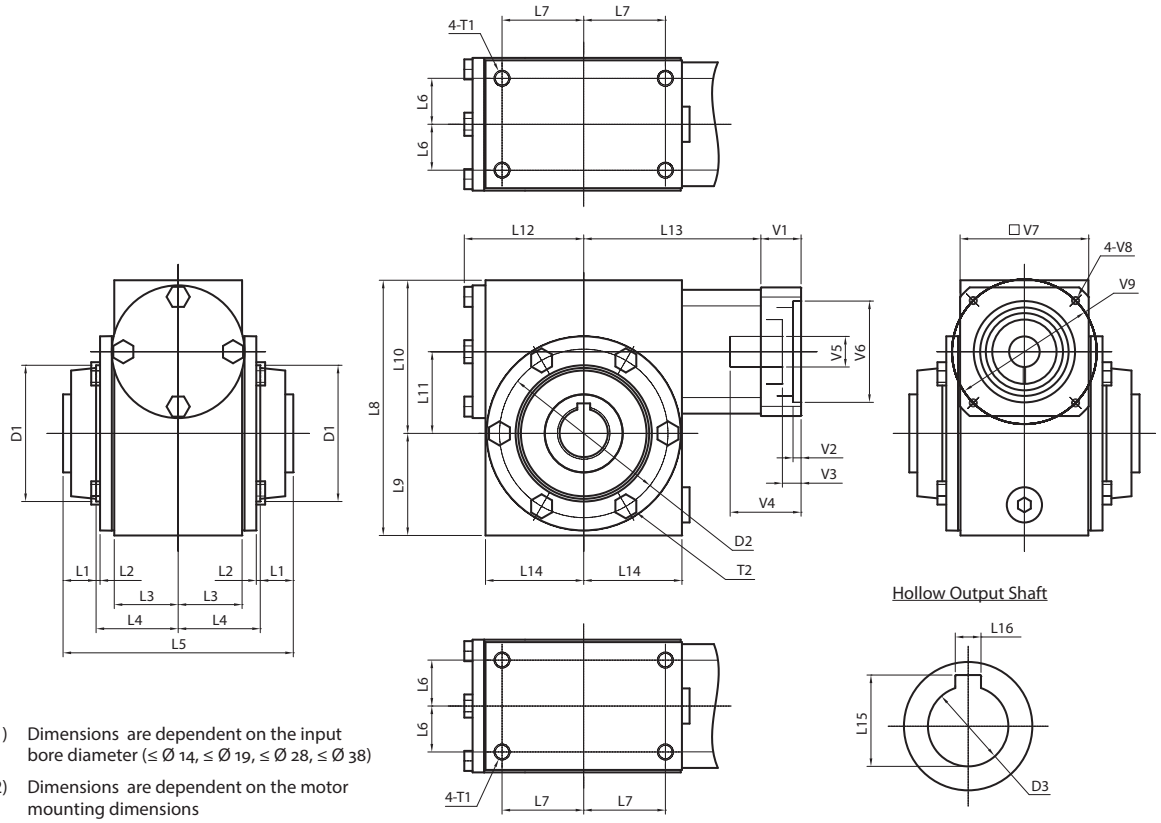

*1) Dimensions are dependent on the input bore diameter (≤ Ø 14, ≤ Ø 19, ≤ Ø 28, ≤ Ø 38)

*2) Dimensions are dependent on the motor mounting dimensions

Frame Size	Unit	Note	EJH-015	EJH-020	EJH-025	EJH-030	EJH-035
L1	[mm]	--	6.5	15.5	13.5	21.5	15
L2	[mm]	--	3.5	2.5	3	3.5	5
L3	[mm]	--	42	40	49	65	87
L4	[mm]	--	52.5	51	60.5	78.5	102
L5	[mm]	--	118	134	148	200	234
L6	[mm]	--	33.5	28.5	38	49	71.5
L7	[mm]	--	36.5	51	65	81	97
L8	[mm]	--	121	159	191	230	262
L9	[mm]	--	41.5	63.5	76	92	108
L10	[mm]	--	79.5	95.5	115	138	154
L11	[mm]	--	38.1	50.8	63.5	76.2	88.9
L12	[mm]	--	55	73	93	115	131
L13	[mm]	*1	95.5 - 105.5	113.5 - 123.5	137.5 - 149.5	156 - 168	174.5 - 186.5
L14	[mm]	--	45	61	79	98	113
L15	[mm]	--	28.5	33.5	38.5	49	64.5
L16	[mm]	--	8	8	10	14	18
D1 ±0.03	[mm]	--	ø63.45	ø84.73	ø107.11	ø135.69	ø134.26
D2	[mm]	--	ø79.5	ø105	ø125.5	ø155.5	ø184
D3 (H7)	[mm]	--	ø25	ø30	ø35	ø45	ø60
T1	[mm]	--	4xM8x12	4xM10x15	4xM10x15	4xM12x18	4xM12x18
T2	[mm]	--	4xM6 Bolts	4xM8 Bolts	8xM8 Bolts	6xM10 Bolts	6xM10 Bolts
V1 ~ V9	[mm]	*2	Motor attachment dimensions are made to fit your servo motor.				

EJH Dimensions – Solid Output Shaft

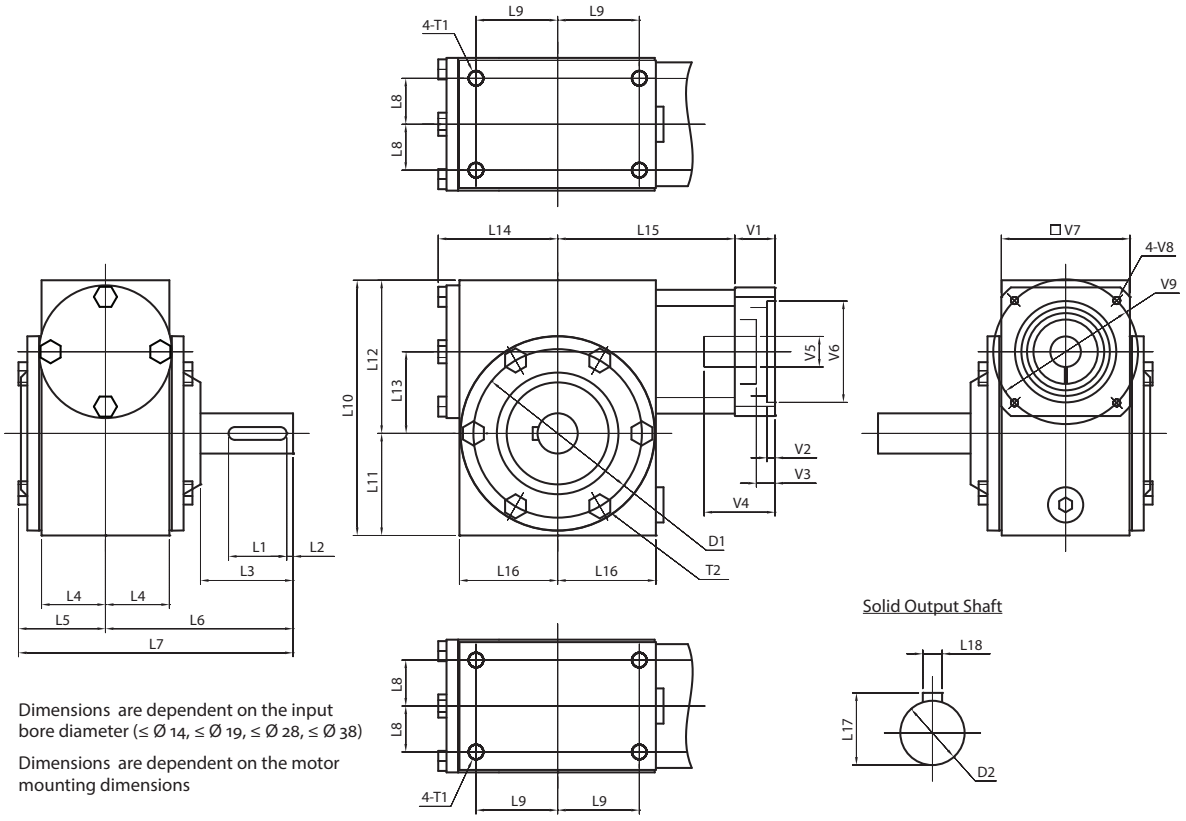

*1) Dimensions are dependent on the input bore diameter (≤ Ø 14, ≤ Ø 19, ≤ Ø 28, ≤ Ø 38)

*2) Dimensions are dependent on the motor mounting dimensions

Frame Size	Unit	Note	EJH-015	EJH-020	EJH-025	EJH-030	EJH-035
L1	[mm]	--	22	36	40	50	63
L2	[mm]	--	4	4	3	3	5
L3	[mm]	--	32.5	57.5	55	85.5	97.5
L4	[mm]	--	42	40	49	65	87
L5	[mm]	--	53	54.5	65.5	84	106.5
L6	[mm]	--	89	117.5	121.5	168.5	209.5
L7	[mm]	--	142	172	187	252.5	316
L8	[mm]	--	33.5	28.5	38	49	71.5
L9	[mm]	--	36.5	51	65	81	97
L10	[mm]	--	121	159	191	230	262
L11	[mm]	--	41.5	63.5	76	92	108
L12	[mm]	--	79.5	95.5	115	138	154
L13	[mm]	--	38.1	50.8	63.5	76.2	88.9
L14	[mm]	--	55	73	93	115	131
L15	[mm]	*1	95.5 - 105.5	113.5 - 123.5	137.5 - 149.5	156 - 168	174.5 - 186.5
L16	[mm]	--	45	61	79	98	113
L17	[mm]	--	22.5	28	33	41	48.5
L18	[mm]	--	6	8	8	10	14
D1	[mm]	--	ø79.5	ø105	ø125.5	ø155.5	ø184
D2 (k6)	[mm]	--	ø20	ø25	ø30	ø38	ø45
T1	[mm]	--	4xM8x12	4xM10x15	4xM10x15	4xM12x18	4xM12x18
T2	[mm]	--	4xM6 Bolts	4xM8 Bolts	8xM8 Bolts	6xM10 Bolts	6xM10 Bolts
V1 ~ V9	[mm]	*2	Motor attachment dimensions are made to fit your servo motor.				

EJH Dimensions – Hollow Output with Shrink Disk

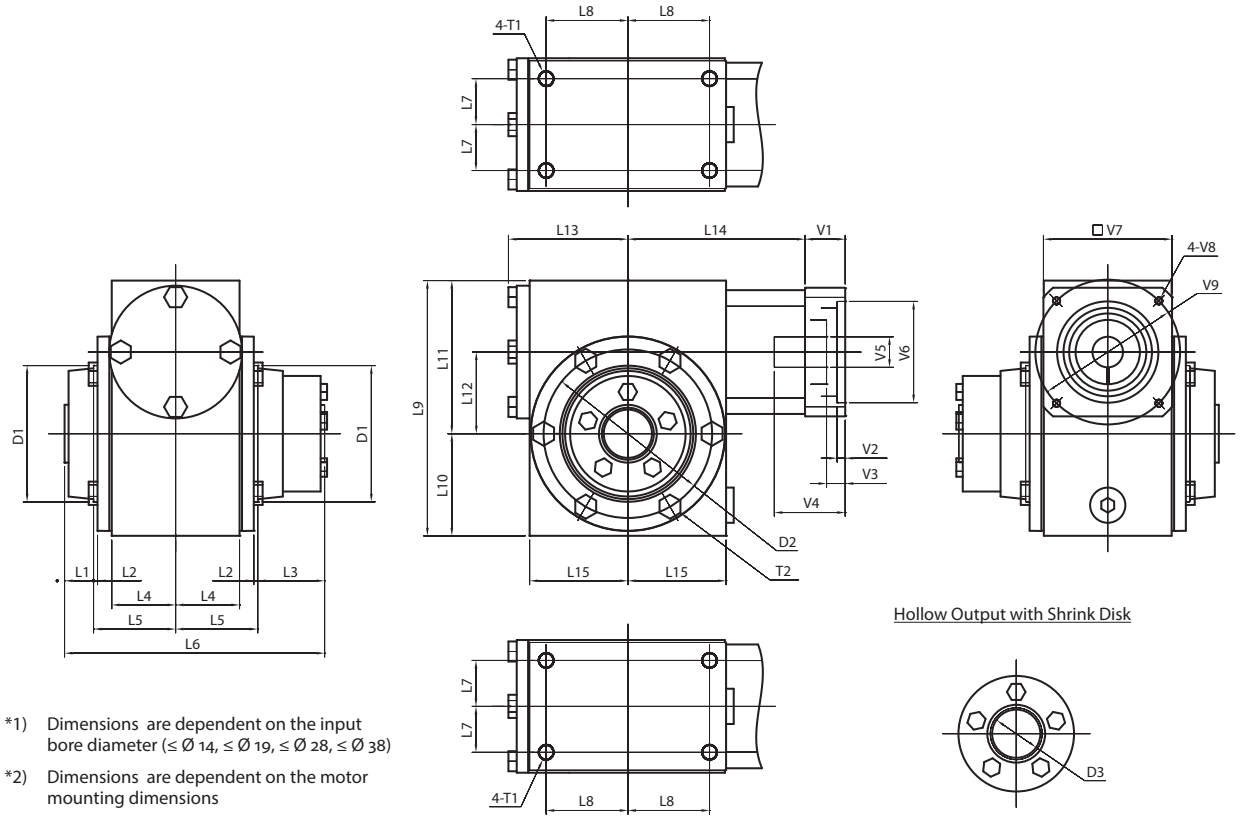

*1) Dimensions are dependent on the input bore diameter (≤ Ø 14, ≤ Ø 19, ≤ Ø 28, ≤ Ø 38)

*2) Dimensions are dependent on the motor mounting dimensions

Frame Size	Unit	Note	EJH-015	EJH-020	EJH-025	EJH-030	EJH-035
L1	[mm]	--	6.5	15.5	13.5	21.5	15
L2	[mm]	--	3.5	2.5	3	3.5	5
L3	[mm]	--	30.5	41.5	48.5	56.5	57
L4	[mm]	--	42	40	49	65	87
L5	[mm]	--	52.5	51	60.5	78.5	101
L6	[mm]	--	141.5	159.5	183	235	271
L7	[mm]	--	33.5	28.5	38	49	71.5
L8	[mm]	--	36.5	51	65	81	97
L9	[mm]	--	121	159	191	230	262
L10	[mm]	--	41.5	63.5	76	92	108
L11	[mm]	--	79.5	95.5	115	138	154
L12	[mm]	--	38.1	50.8	63.5	76.2	88.9
L13	[mm]	--	55	73	93	115	131
L14	[mm]	*1	95.5 - 105.5	113.5 - 123.5	137.5 - 149.5	156 - 168	174.5 - 186.5
L15	[mm]	--	45	61	79	98	113
D1 ±0.03	[mm]	--	ø63.45	ø84.73	ø107.11	ø135.69	ø134.26
D2	[mm]	--	ø79.5	ø105	ø125.5	ø155.5	ø184
D3 (H7)	[mm]	--	ø25	ø30	ø35	ø45	ø60
T1	[mm]	--	4xM8x12	4xM10x15	4xM10x15	4xM12x18	4xM12x18
T2	[mm]	--	4xM6 Bolts	4xM8 Bolts	8xM8 Bolts	6xM10 Bolts	6xM10 Bolts
V1 ~ V9	[mm]	*2	Motor attachment dimensions are made to fit your servo motor.				

EJH Dimensions – Optional Mounting Flange (*1)

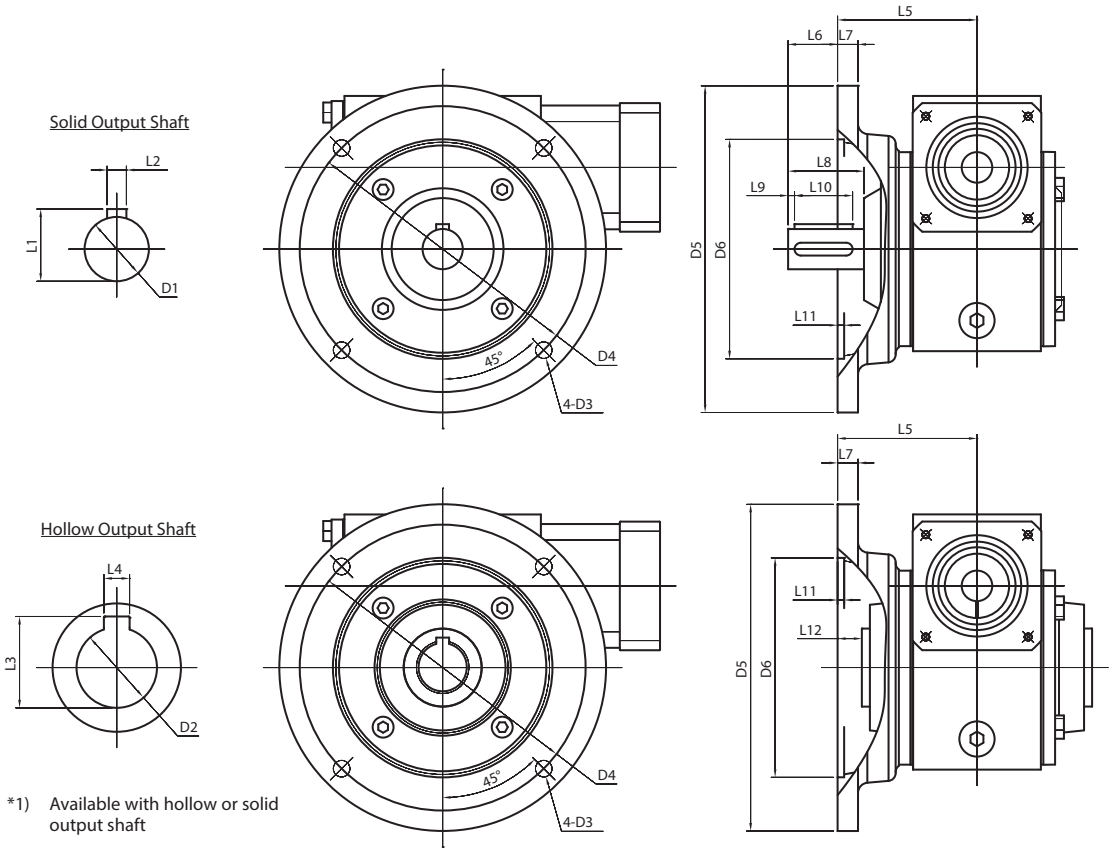

*1) Available with hollow or solid output shaft

Frame Size	Unit	Note	EJH-015	EJH-020	EJH-025	EJH-030	EJH-035
L1	[mm]	--	22.5	28	33	41	48.5
L2	[mm]	--	6	8	8	10	14
L3	[mm]	--	28.5	33.5	38.5	49	64.5
L4	[mm]	--	8	8	10	14	18
L5	[mm]	--	86	87	89	111	129
L6	[mm]	--	2.5	31	32	58	80.5
L7	[mm]	--	10	13	13	13	13
L8	[mm]	--	32.5	57.5	55.0	85.5	97.5
L9	[mm]	--	4	4	3	3	5
L10	[mm]	--	22	36	40	50	63
L11	[mm]	--	4	4	5	7	7
L12	[mm]	--	27.5	20	15.5	10.5	12
D1 (k6)	[mm]	--	ø20	ø25	ø30	ø38	ø45
D2 (H7)	[mm]	--	ø25	ø30	ø35	ø45	ø60
D3	[mm]	--	ø10	ø10	ø12	ø14	ø14
D4	[mm]	--	ø149	ø178	ø210	ø241	ø267
D5	[mm]	--	ø168	ø203	ø235	ø267	ø298
D6 ±0.03	[mm]	--	ø114.30	ø136.55	ø168.30	ø196.88	ø222.28

EJP SERIES

The EJP series is ideal for demanding applications requiring high efficiency, torsional rigidity and zero backlash. It's lightweight, black anodized aluminum housing and dual input/output seals allow for excellent environmental protection with minimal maintenance. The EJP is part of our modular design platform, which means it can be mounted to any servomotor manufacturer with ease.

Our internal design captures both sides of the gear tooth to completely eliminate backlash and guarantee it for the life of the product. Exact reduction ratios allow for simplified servo tuning. Ratios 5:1 through 60:1 are available in a single stage, resulting in a more compact design. The face mounting option gives customers the ability to directly attach components such as tables, pinion gears and timing belt pulleys, eliminating the need for couplings.

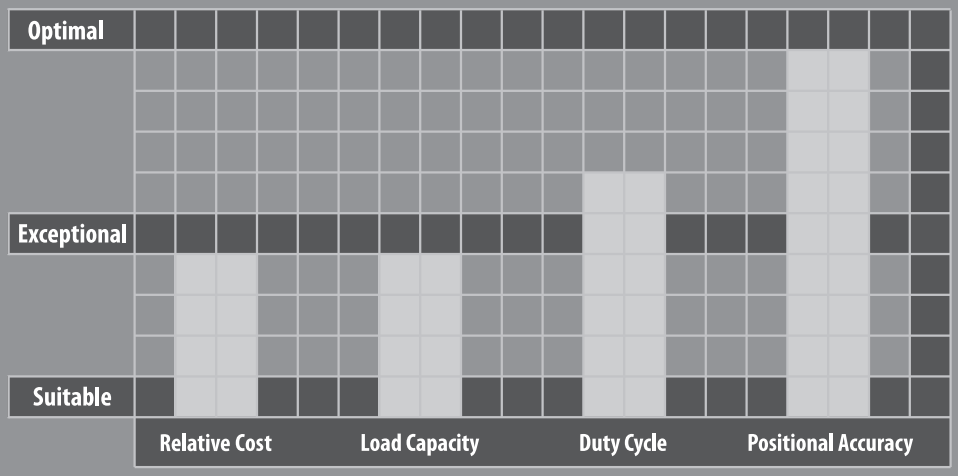

EJP SERIES

- Performance leader in its category
- High positional accuracy and torsional rigidity combined with low noise and exceptionally smooth operation. Zero backlash available
- Wide range of output mounting options
- Compact design – up to 60:1 available in a single stage configuration

EJP Series Features

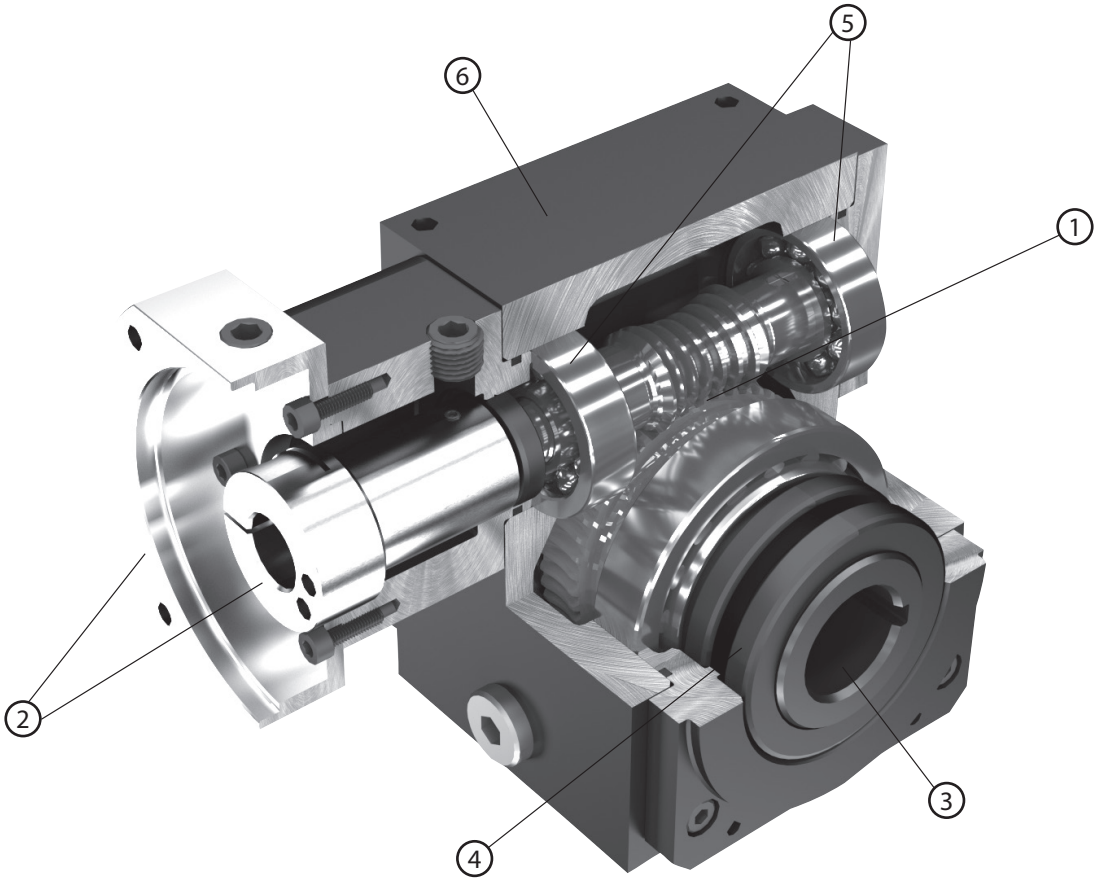

1. Globoidal gear set – between 3-8 teeth in contact at once, allowing 300% shock load capacity
2. Adapter–bushing connection allows simple mounting to virtually any servomotor manufacturer
3. Wide range of output mounting styles available – hollow shaft, solid shaft, face mount, shrink disc
4. Double oil seal and o-ring provide IP65 protection
5. Ball bearings help reduce friction and heat
6. Anodized, thermally efficient aluminum housing

EJP Series Model Code

EJP	–	038	–	25	–	H0	–	0	–	19HB16

- 19HB16: *Motor mounting code
- 0: Backlash: 0: Standard Backlash; Z: Zero Backlash
- H0: Output mounting style:
  - H0: Keyed Hollow Shaft
  - SR: Keyed Solid Shaft Right
  - SL: Keyed Solid Shaft Left
  - SW: Keyed Dual Solid Shaft
  - DR: Hollow Shrink Disc Right
  - DL: Hollow Shrink Disc Left
  - FR: Robot Flange Right
  - FL: Robot Flange Left
- 25: Ratio: 5, 6, 7, 8, 9, 10, 15, 20, 25, 30, 40, 50, 60
- 038: Frame size: 038, 051, 064, 076, 089
- EJP: Series

* Motor mounting code varies depending on the motor. Contact us to configure the code.

EJP 038 1-Stage Specifications

Frame Size	**038**								
Ratio	Unit	Note	5	6	7	8	9	10	15
Nominal Output Torque	[Nm]	--	35	---	---	---	---	46	49
Maximum Acceleration Torque	[Nm]	--	46	---	---	---	---	59	61
Emergency Stop Torque	[Nm]	--	105	---	---	---	---	138	147
No Load Running Torque	[Nm]	*1	0.51						
Nominal Input Speed	[rpm]	--	2,000						
Maximum Continuous Input Speed	[rpm]	--	4,000						
Maximum Cyclic Input Speed	[rpm]	--	6,000						
Maximum Radial Load	[N]	*2	3,110						
Maximum Axial Load	[N]	*3	1,780						
Moment of Inertia (≤ Ø14)	[kgcm2]	--	0.75	---	---	---	---	0.59	0.56
Moment of Inertia (≤ Ø19)	[kgcm2]	--	0.95	---	---	---	---	0.79	0.76
Moment of Inertia (≤ Ø28)	[kgcm2]	--	2.13	---	---	---	---	1.97	1.94
Efficiency	[%]	*4	88	---	---	---	---	86	84
Torsional Rigidity	[Nm/arcmin]	--	3.8						
Maximum Torsional Backlash (Standard)	[Arc-min]	--	≤ 8						
Noise Level	dB [A]	*5	≤ 73						
Ambient Temperature	[°C]	--	-25 ~ 100						
Permitted Housing Temperature	[°C]	--	100						
Protection Class	--	--	IP65						
Lubrication	--	--	Synthetic Oil						
Service Life	[Hours]	--	25,000						
Weight	[kg]	*6	4.1						

*1) Torque at no load applied to the input shaft at 2,000 rpm
*2) The maximum radial load the gearbox can accept
*3) The maximum axial load the gearbox can accept
*4) The efficiency at the nominal output torque rating
*5) Measured with no load applied to the input shaft at 2,000 rpm
*6) Weight may vary slightly between models

EJP 038 1-Stage Specifications

Frame Size	**038**							
Ratio	Unit	Note	20	25	30	40	50	60
Nominal Output Torque	[Nm]	--	47	---	46	42	42	38
Maximum Acceleration Torque	[Nm]	--	60	---	56	52	52	47
Emergency Stop Torque	[Nm]	--	141	---	138	126	126	114
No Load Running Torque	[Nm]	*1	0.51					
Nominal Input Speed	[rpm]	--	2,000					
Maximum Continuous Input Speed	[rpm]	--	4,000					
Maximum Cyclic Input Speed	[rpm]	--	6,000					
Maximum Radial Load	[N]	*2	3,110					
Maximum Axial Load	[N]	*3	1,780					
Moment of Inertia (≤ Ø14)	[kgcm2]	--	0.54	---	0.54	0.53	0.53	0.53
Moment of Inertia (≤ Ø19)	[kgcm2]	--	0.74	---	0.74	0.73	0.73	0.73
Moment of Inertia (≤ Ø28)	[kgcm2]	--	1.92	---	1.92	1.91	1.91	1.91
Efficiency	[%]	*4	81	---	76	72	69	66
Torsional Rigidity	[Nm/arcmin]	--	3.8					
Maximum Torsional Backlash (Standard)	[Arc-min]	--	≤ 8					
Noise Level	dB [A]	*5	≤ 73					
Ambient Temperature	[°C]	--	-25 ~ 100					
Permitted Housing Temperature	[°C]	--	100					
Protection Class	--	--	IP65					
Lubrication	--	--	Synthetic Oil					
Service Life	[Hours]	--	25,000					
Weight	[kg]	*6	4.1					

*1) Torque at no load applied to the input shaft at 2,000 rpm

*2) The maximum radial load the gearbox can accept

*3) The maximum axial load the gearbox can accept

*4) The efficiency at the nominal output torque rating

*5) Measured with no load applied to the input shaft at 2,000 rpm

*6) Weight may vary slightly between models

EJP 051 1-Stage Specifications

Frame Size	**051**								
Ratio	Unit	Note	5	6	7	8	9	10	15
Nominal Output Torque	[Nm]	--	67	75	78	82	85	87	90
Maximum Acceleration Torque	[Nm]	--	90	99	110	110	110	120	120
Emergency Stop Torque	[Nm]	--	201	225	234	246	255	261	270
No Load Running Torque	[Nm]	*1	1.61						
Nominal Input Speed	[rpm]	--	2,000						
Maximum Continuous Input Speed	[rpm]	--	4,000						
Maximum Cyclic Input Speed	[rpm]	--	6,000						
Maximum Radial Load	[N]	*2	6,670						
Maximum Axial Load	[N]	*3	1,820						
Moment of Inertia (≤ Ø14)	[kgcm2]	--	1.52	1.28	1.14	1.04	0.98	0.94	0.83
Moment of Inertia (≤ Ø19)	[kgcm2]	--	1.72	1.48	1.34	1.24	1.18	1.14	1.03
Moment of Inertia (≤ Ø28)	[kgcm2]	--	2.89	2.66	2.52	2.42	2.36	2.31	2.21
Efficiency	[%]	*4	92	91	91	91	90	90	88
Torsional Rigidity	[Nm/arcmin]	--	7.6						
Maximum Torsional Backlash (Standard)	[Arc-min]	--	≤ 6						
Maximum Torsional Backlash (Zero)	[Arc-min]	--	≤ 0						
Noise Level	dB [A]	*5	≤ 75						
Ambient Temperature	[°C]	--	-25 ~ 100						
Permitted Housing Temperature	[°C]	--	100						
Protection Class	--	--	IP65						
Lubrication	--	--	Synthetic Oil						
Service Life	[Hours]	--	25,000						
Weight	[kg]	*6	8.2						

*1) Torque at no load applied to the input shaft at 2,000 rpm

*2) The maximum radial load the gearbox can accept

*3) The maximum axial load the gearbox can accept

*4) The efficiency at the nominal output torque rating

*5) Measured with no load applied to the input shaft at 2,000 rpm

*6) Weight may vary slightly between models

EJP 051 1-Stage Specifications

Frame Size	**051**							
Ratio	Unit	Note	20	25	30	40	50	60
Nominal Output Torque	[Nm]	--	88	89	86	81	78	75
Maximum Acceleration Torque	[Nm]	--	120	120	110	110	100	100
Emergency Stop Torque	[Nm]	--	264	267	258	243	234	225
No Load Running Torque	[Nm]	*1	1.61					
Nominal Input Speed	[rpm]	--	2,000					
Maximum Continuous Input Speed	[rpm]	--	4,000					
Maximum Cyclic Input Speed	[rpm]	--	6,000					
Maximum Radial Load	[N]	*2	6,670					
Maximum Axial Load	[N]	*3	1,820					
Moment of Inertia (≤ Ø14)	[kgcm2]	--	0.79	0.77	0.76	0.75	0.75	0.75
Moment of Inertia (≤ Ø19)	[kgcm2]	--	0.99	0.97	0.96	0.95	0.95	0.95
Moment of Inertia (≤ Ø28)	[kgcm2]	--	2.17	2.15	2.14	2.13	2.13	2.13
Efficiency	[%]	*4	85	84	80	76	73	70
Torsional Rigidity	[Nm/arcmin]	--	7.6					
Maximum Torsional Backlash (Standard)	[Arc-min]	--	≤ 6					
Maximum Torsional Backlash (Zero)	[Arc-min]	--	≤ 0					
Noise Level	dB [A]	*5	≤ 75					
Ambient Temperature	[°C]	--	-25 ~ 100					
Permitted Housing Temperature	[°C]	--	100					
Protection Class	--	--	IP65					
Lubrication	--	--	Synthetic Oil					
Service Life	[Hours]	--	25,000					
Weight	[kg]	*6	8.2					

*1) Torque at no load applied to the input shaft at 2,000 rpm
*2) The maximum radial load the gearbox can accept
*3) The maximum axial load the gearbox can accept
*4) The efficiency at the nominal output torque rating
*5) Measured with no load applied to the input shaft at 2,000 rpm
*6) Weight may vary slightly between models

EJP 064 1-Stage Specifications

Frame Size	**064**								
Ratio	Unit	Note	5	6	7	8	9	10	15
Nominal Output Torque	[Nm]	--	120	180	140	150	150	150	160
Maximum Acceleration Torque	[Nm]	--	170	180	190	210	210	210	220
Emergency Stop Torque	[Nm]	--	360	540	420	450	450	450	480
No Load Running Torque	[Nm]	*1	2.72						
Nominal Input Speed	[rpm]	--	2,000						
Maximum Continuous Input Speed	[rpm]	--	4,000						
Maximum Cyclic Input Speed	[rpm]	--	6,000						
Maximum Radial Load	[N]	*2	8,890						
Maximum Axial Load	[N]	*3	1,860						
Moment of Inertia (≤ Ø19)	[kgcm2]	--	5.42	4.66	4.20	3.90	3.69	3.54	3.20
Moment of Inertia (≤ Ø28)	[kgcm2]	--	6.24	5.48	5.02	4.72	4.51	4.36	4.02
Moment of Inertia (≤ Ø38)	[kgcm2]	--	11.8	11.1	10.6	10.3	10.1	9.94	9.60
Efficiency	[%]	*4	92	92	91	91	90	90	88
Torsional Rigidity	[Nm/arcmin]	--	17.5						
Maximum Torsional Backlash (Standard)	[Arc-min]	--	≤ 5						
Maximum Torsional Backlash (Zero)	[Arc-min]	--	≤ 0						
Noise Level	dB [A]	*5	≤ 80						
Ambient Temperature	[°C]	--	-25 ~ 100						
Permitted Housing Temperature	[°C]	--	100						
Protection Class	--	--	IP65						
Lubrication	--	--	Synthetic Oil						
Service Life	[Hours]	--	25,000						
Weight	[kg]	*6	15						

*1) Torque at no load applied to the input shaft at 2,000 rpm

*2) The maximum radial load the gearbox can accept

*3) The maximum axial load the gearbox can accept

*4) The efficiency at the nominal output torque rating

*5) Measured with no load applied to the input shaft at 2,000 rpm

*6) Weight may vary slightly between models

EJP 064 1-Stage Specifications

Frame Size	**064**							
Ratio	Unit	Note	20	25	30	40	50	60
Nominal Output Torque	[Nm]	--	160	160	150	150	140	130
Maximum Acceleration Torque	[Nm]	--	220	220	210	200	190	180
Emergency Stop Torque	[Nm]	--	480	480	450	450	420	390
No Load Running Torque	[Nm]	*1	2.72					
Nominal Input Speed	[rpm]	--	2,000					
Maximum Continuous Input Speed	[rpm]	--	4,000					
Maximum Cyclic Input Speed	[rpm]	--	6,000					
Maximum Radial Load	[N]	*2	8,890					
Maximum Axial Load	[N]	*3	1,860					
Moment of Inertia (≤ Ø19)	[kgcm2]	--	3.07	3.02	2.99	2.96	2.94	2.93
Moment of Inertia (≤ Ø28)	[kgcm2]	--	3.89	3.84	3.81	3.78	3.76	3.75
Moment of Inertia (≤ Ø38)	[kgcm2]	--	9.47	9.42	9.39	9.36	9.34	9.33
Efficiency	[%]	*4	85	84	80	76	73	70
Torsional Rigidity	[Nm/arcmin]	--	17.5					
Maximum Torsional Backlash (Standard)	[Arc-min]	--	≤ 5					
Maximum Torsional Backlash (Zero)	[Arc-min]	--	≤ 0					
Noise Level	dB [A]	*5	≤ 80					
Ambient Temperature	[°C]	--	-25 ~ 100					
Permitted Housing Temperature	[°C]	--	100					
Protection Class	--	--	IP65					
Lubrication	--	--	Synthetic Oil					
Service Life	[Hours]	--	25,000					
Weight	[kg]	*6	15					

*1) Torque at no load applied to the input shaft at 2,000 rpm

*2) The maximum radial load the gearbox can accept

*3) The maximum axial load the gearbox can accept

*4) The efficiency at the nominal output torque rating

*5) Measured with no load applied to the input shaft at 2,000 rpm

*6) Weight may vary slightly between models

EJP 076 1-Stage Specifications

Frame Size	**076**								
Ratio	Unit	Note	5	6	7	8	9	10	15
Nominal Output Torque	[Nm]	--	200	220	230	250	260	260	270
Maximum Acceleration Torque	[Nm]	--	270	310	320	340	350	370	380
Emergency Stop Torque	[Nm]	--	600	660	690	750	780	780	810
No Load Running Torque	[Nm]	*1	3.46						
Nominal Input Speed	[rpm]	--	2,000						
Maximum Continuous Input Speed	[rpm]	--	4,000						
Maximum Cyclic Input Speed	[rpm]	--	6,000						
Maximum Radial Load	[N]	*2	11,110						
Maximum Axial Load	[N]	*3	4,220						
Moment of Inertia (≤ Ø19)	[kgcm2]	--	13.3	11.1	9.8	8.94	8.35	7.92	6.92
Moment of Inertia (≤ Ø28)	[kgcm2]	--	16.2	14.0	12.7	11.8	11.2	10.8	9.78
Moment of Inertia (≤ Ø38)	[kgcm2]	--	19.9	17.7	16.3	15.5	14.9	14.5	13.5
Efficiency	[%]	*4	92	92	91	91	90	89	88
Torsional Rigidity	[Nm/arcmin]	--	38.5						
Maximum Torsional Backlash (Standard)	[Arc-min]	--	≤ 4						
Maximum Torsional Backlash (Zero)	[Arc-min]	--	≤ 0						
Noise Level	dB [A]	*5	≤ 80						
Ambient Temperature	[°C]	--	-25 ~ 100						
Permitted Housing Temperature	[°C]	--	100						
Protection Class	--	--	IP65						
Lubrication	--	--	Synthetic Oil						
Service Life	[Hours]	--	25,000						
Weight	[kg]	*6	25						

*1) Torque at no load applied to the input shaft at 2,000 rpm

*2) The maximum radial load the gearbox can accept

*3) The maximum axial load the gearbox can accept

*4) The efficiency at the nominal output torque rating

*5) Measured with no load applied to the input shaft at 2,000 rpm

*6) Weight may vary slightly between models

EJP 076 1-Stage Specifications

Frame Size	**076**							
Ratio	Unit	Note	20	25	30	40	50	60
Nominal Output Torque	[Nm]	--	270	270	260	250	240	230
Maximum Acceleration Torque	[Nm]	--	370	370	360	340	330	320
Emergency Stop Torque	[Nm]	--	810	810	780	750	720	690
No Load Running Torque	[Nm]	*1	3.46					
Nominal Input Speed	[rpm]	--	2,000					
Maximum Continuous Input Speed	[rpm]	--	4,000					
Maximum Cyclic Input Speed	[rpm]	--	6,000					
Maximum Radial Load	[N]	*2	11,110					
Maximum Axial Load	[N]	*3	4,220					
Moment of Inertia (≤ Ø19)	[kgcm2]	--	6.57	6.41	6.32	6.24	6.19	6.17
Moment of Inertia (≤ Ø28)	[kgcm2]	--	9.43	9.27	9.18	9.10	9.05	9.03
Moment of Inertia (≤ Ø38)	[kgcm2]	--	13.1	13.0	12.9	12.8	12.7	12.7
Efficiency	[%]	*4	85	84	80	76	73	70
Torsional Rigidity	[Nm/arcmin]	--	38.5					
Maximum Torsional Backlash (Standard)	[Arc-min]	--	≤ 4					
Maximum Torsional Backlash (Zero)	[Arc-min]	--	≤ 0					
Noise Level	dB [A]	*5	≤ 80					
Ambient Temperature	[°C]	--	-25 ~ 100					
Permitted Housing Temperature	[°C]	--	100					
Protection Class	--	--	IP65					
Lubrication	--	--	Synthetic Oil					
Service Life	[Hours]	--	25,000					
Weight	[kg]	*6	25					

*1) Torque at no load applied to the input shaft at 2,000 rpm

*2) The maximum radial load the gearbox can accept

*3) The maximum axial load the gearbox can accept

*4) The efficiency at the nominal output torque rating

*5) Measured with no load applied to the input shaft at 2,000 rpm

*6) Weight may vary slightly between models

EJP 089 1-Stage Specifications

Frame Size	**089**								
Ratio	Unit	Note	5	6	7	8	9	10	15
Nominal Output Torque	[Nm]	--	340	380	400	430	440	460	480
Maximum Acceleration Torque	[Nm]	--	480	540	570	600	620	640	660
Emergency Stop Torque	[Nm]	--	1020	1140	1200	1290	1320	1380	1440
No Load Running Torque	[Nm]	*1	4.20						
Nominal Input Speed	[rpm]	--	2,000						
Maximum Continuous Input Speed	[rpm]	--	4,000						
Maximum Cyclic Input Speed	[rpm]	--	6,000						
Maximum Radial Load	[N]	*2	15,560						
Maximum Axial Load	[N]	*3	4,000						
Moment of Inertia (≤ Ø19)	[kgcm2]	--	28.3	23.9	21.2	19.5	18.3	17.4	15.4
Moment of Inertia (≤ Ø28)	[kgcm2]	--	32.3	27.8	25.2	23.4	22.2	21.4	19.4
Moment of Inertia (≤ Ø38)	[kgcm2]	--	36.9	32.5	29.8	28.1	26.9	26.0	24.0
Efficiency	[%]	*4	91	91	91	90	90	89	87
Torsional Rigidity	[Nm/arcmin]	--	71						
Maximum Torsional Backlash (Standard)	[Arc-min]	--	≤ 3						
Maximum Torsional Backlash (Zero)	[Arc-min]	--	≤ 0						
Noise Level	dB [A]	*5	≤ 83						
Ambient Temperature	[°C]	--	-25 ~ 100						
Permitted Housing Temperature	[°C]	--	100						
Protection Class	--	--	IP65						
Lubrication	--	--	Synthetic Oil						
Service Life	[Hours]	--	25,000						
Weight	[kg]	*6	50						

*1) Torque at no load applied to the input shaft at 2,000 rpm

*2) The maximum radial load the gearbox can accept

*3) The maximum axial load the gearbox can accept

*4) The efficiency at the nominal output torque rating

*5) Measured with no load applied to the input shaft at 2,000 rpm

*6) Weight may vary slightly between models

EJP 089 1-Stage Specifications

Frame Size	**089**							
Ratio	Unit	Note	20	25	30	40	50	60
Nominal Output Torque	[Nm]	--	470	470	450	430	410	400
Maximum Acceleration Torque	[Nm]	--	650	650	620	590	570	550
Emergency Stop Torque	[Nm]	--	1410	1410	1350	1290	1230	1200
No Load Running Torque	[Nm]	*1	4.20					
Nominal Input Speed	[rpm]	--	2,000					
Maximum Continuous Input Speed	[rpm]	--	4,000					
Maximum Cyclic Input Speed	[rpm]	--	6,000					
Maximum Radial Load	[N]	*2	15,560					
Maximum Axial Load	[N]	*3	4,000					
Moment of Inertia (≤ Ø19)	[kgcm2]	--	14.7	14.4	14.2	14.0	13.9	13.9
Moment of Inertia (≤ Ø28)	[kgcm2]	--	18.7	18.3	18.1	18.0	17.9	17.8
Moment of Inertia (≤ Ø38)	[kgcm2]	--	23.3	23.0	22.8	22.6	22.5	22.5
Efficiency	[%]	*4	84	83	79	75	72	69
Torsional Rigidity	[Nm/arcmin]	--	71					
Maximum Torsional Backlash (Standard)	[Arc-min]	--	≤ 3					
Maximum Torsional Backlash (Zero)	[Arc-min]	--	≤ 0					
Noise Level	dB [A]	*5	≤ 83					
Ambient Temperature	[°C]	--	-25 ~ 100					
Permitted Housing Temperature	[°C]	--	100					
Protection Class	--	--	IP65					
Lubrication	--	--	Synthetic Oil					
Service Life	[Hours]	--	25,000					
Weight	[kg]	*6	50					

*1) Torque at no load applied to the input shaft at 2,000 rpm

*2) The maximum radial load the gearbox can accept

*3) The maximum axial load the gearbox can accept

*4) The efficiency at the nominal output torque rating

*5) Measured with no load applied to the input shaft at 2,000 rpm

*6) Weight may vary slightly between models

EJP Dimensions – Hollow Output Shaft

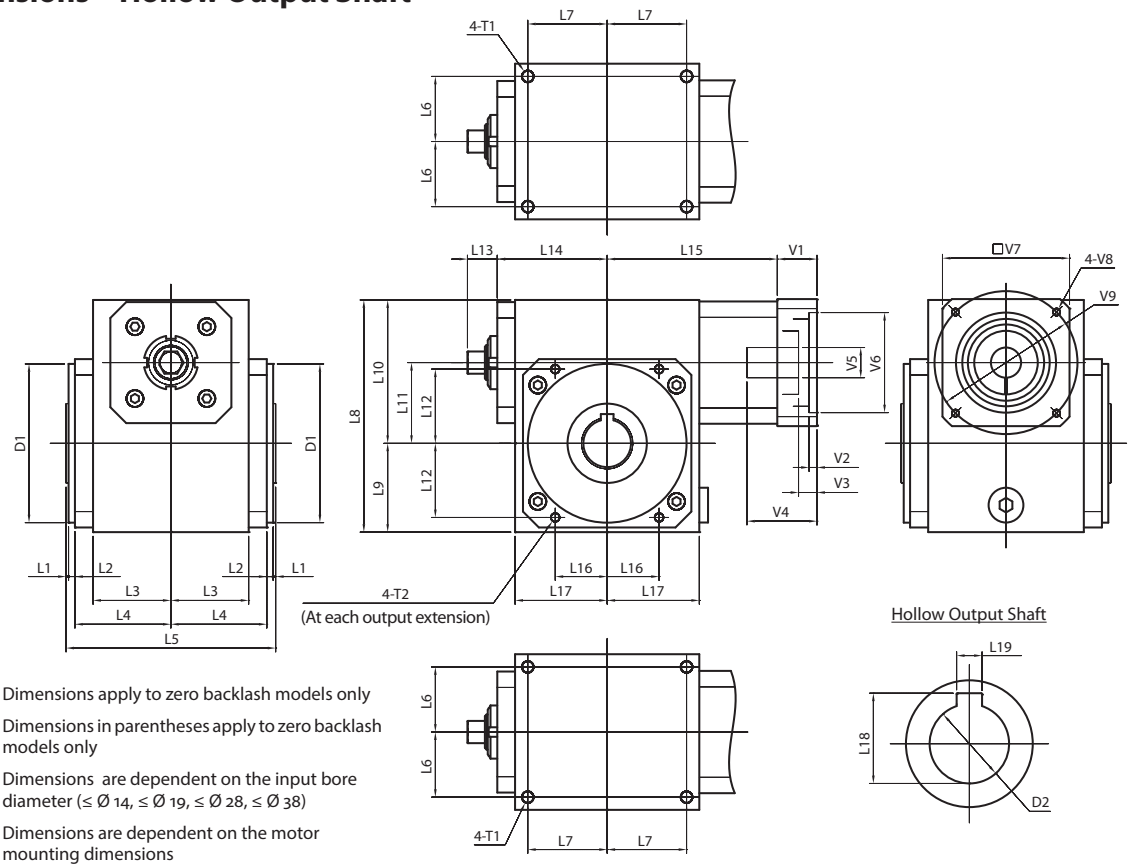

*1) Dimensions apply to zero backlash models only

*2) Dimensions in parentheses apply to zero backlash models only

*3) Dimensions are dependent on the input bore diameter (≤ Ø 14, ≤ Ø 19, ≤ Ø 28, ≤ Ø 38)

*4) Dimensions are dependent on the motor mounting dimensions

Frame Size	Unit	Note	EJP-038	EJP-051	EJP-064	EJP-076	EJP-089
L1	[mm]	--	1	1	1	2	2
L2	[mm]	--	4	4	4	4	4
L3	[mm]	--	39	49	54	73.5	90
L4	[mm]	--	51	60.5	70	94	111.5
L5	[mm]	--	112	132	148	200	234
L6	[mm]	--	32	41	44	63	80
L7	[mm]	--	42	50	68.5	79	95
L8	[mm]	--	118	146.5	181	214	252
L9	[mm]	--	45	56	73	82	100
L10	[mm]	--	73	90.5	108	132	152
L11	[mm]	--	38.1	50.8	63.5	76.2	88.9
L12	[mm]	--	34.5	46.5	57.5	64.5	80.5
L13	[mm]	*1	---	22	22	32	35
L14	[mm]	*2	63	69.5 (71)	94 (96)	110 (111)	125.5 (131)
L15	[mm]	*3	96.5 - 106.5	105 - 115	130.5 - 142.5	151 - 163	165 - 177
L16	[mm]	--	18.5	32.5	40	45.5	46.5
L17	[mm]	--	50.5	58	79	89.5	105
L18	[mm]	--	28.5	33.5	38.5	49.0	64.5
L19	[mm]	--	8	8	10	14	18
D1 (h8)	[mm]	--	ø64	ø100	ø120	ø134	ø145
D2 (H7)	[mm]	--	ø25	ø30	ø35	ø45	ø60
T1	[mm]	--	4xM8x12	4xM8x12	4xM8x12	4xM10x15	4xM10x15
T2	[mm]	--	4xM6x9	4xM6x9	4xM8x12	4xM10x15	4xM10x15
V1 ~ V9	[mm]	*4	Motor attachment dimensions are made to fit your servo motor.				

EJP Dimensions – Solid Output Shaft

*1) Dimensions apply to zero backlash models only

*2) Dimensions in parentheses apply to zero backlash models only

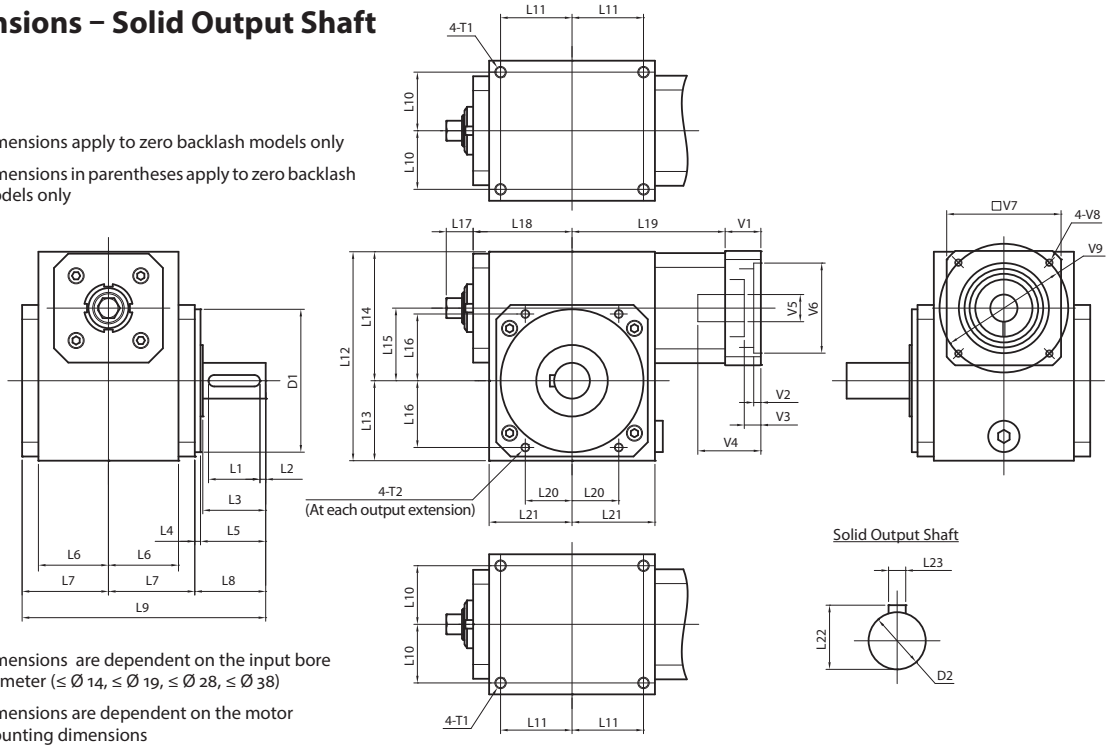

*3) Dimensions are dependent on the input bore diameter (≤ Ø 14, ≤ Ø 19, ≤ Ø 28, ≤ Ø 38)

*4) Dimensions are dependent on the motor mounting dimensions

Frame Size	Unit	Note	EJP-038	EJP-051	EJP-064	EJP-076	EJP-089
L1	[mm]	--	22	36	40	50	63
L2	[mm]	--	90	4	4	5	5
L3	[mm]	--	30	44	50	67	83
L4	[mm]	--	4	4	4	4	4
L5	[mm]	--	31	45.5	51	67	84.5
L6	[mm]	--	39	49	54	73.5	90
L7	[mm]	--	51	60.5	70	94	111
L8	[mm]	--	35	49.5	55	71	88.5
L9	[mm]	--	137	170.5	194	259	311.5
L10	[mm]	--	32	41	44	63	80
L11	[mm]	--	42	50	68.5	79	95
L12	[mm]	--	118	146.5	181	214	252
L13	[mm]	--	45	56	73	82	100
L14	[mm]	--	73	90.5	108	132	152
L15	[mm]	--	38.1	50.8	63.5	76.2	88.9
L16	[mm]	--	34.5	46.5	57.5	64.5	80.5
L17	[mm]	*1	---	22	22	32	35
L18	[mm]	*2	63	69.5 (71)	94 (96)	110 (111)	125.5 (131)
L19	[mm]	*3	96.5 - 106.5	105 - 115	130.5 - 142.5	151 - 163	165 - 177
L20	[mm]	--	18.5	32.5	40	45.5	46.5
L21	[mm]	--	50.5	58	79	89.5	105
L22	[mm]	--	22.5	28	33	38	48.5
L23	[mm]	--	6	8	8	10	14
D1 (h8)	[mm]	--	ø64	ø100	ø120	ø134	ø145
D2 (k6)	[mm]	--	ø20	ø25	ø30	ø35	ø45
T1	[mm]	--	4xM8x12	4xM8x12	4xM8x12	4xM10x15	4xM10x15
T2	[mm]	--	4xM6x9	4xM6x9	4xM8x12	4xM10x15	4xM10x15
V1 ~ V9	[mm]	*4	Motor attachment dimensions are made to fit your servo motor.				

EJP Dimensions – Flange Output

*1) Dimensions apply to zero backlash models only

*2) Dimensions in parentheses apply to zero backlash models only

*3) Dimensions are dependent on the input bore diameter (≤ Ø 14, ≤ Ø 19, ≤ Ø 28, ≤ Ø 38)

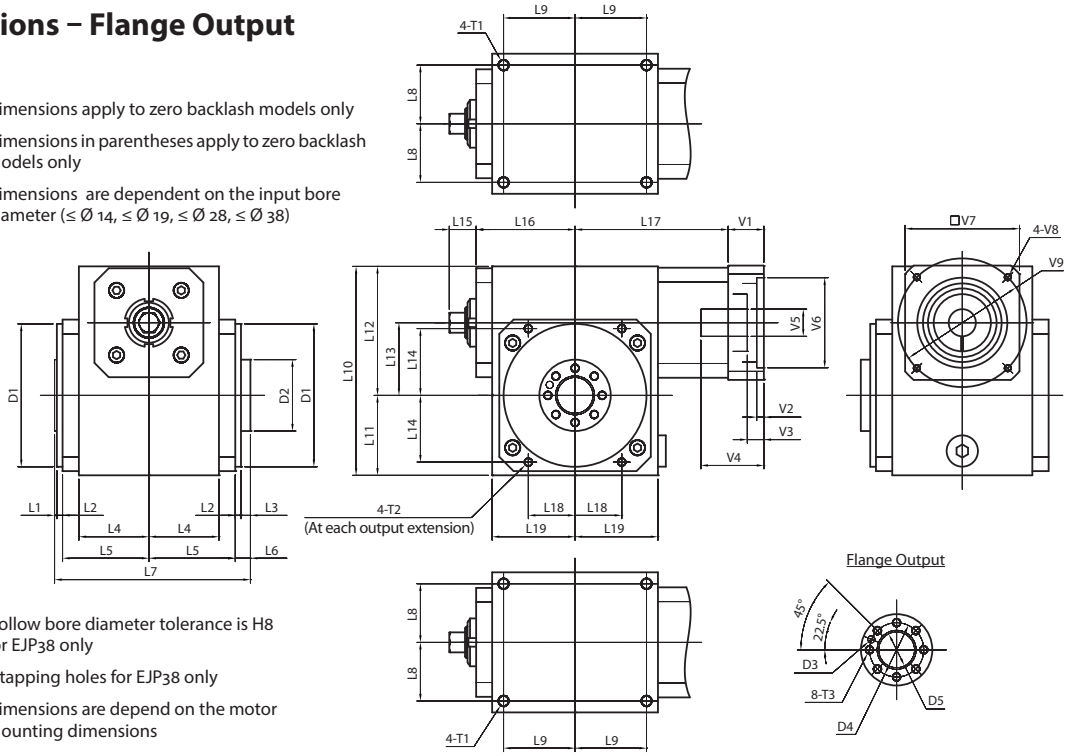

*4) Hollow bore diameter tolerance is H8 for EJP38 only

*5) 4 tapping holes for EJP38 only

*6) Dimensions are depend on the motor mounting dimensions

Frame Size	Unit	Note	EJP-038	EJP-051	EJP-064	EJP-076	EJP-089
L1	[mm]	--	1	1.5	1.5	2	2
L2	[mm]	--	4	4	4	4	4
L3	[mm]	--	6	6.5	6	7	7
L4	[mm]	--	39	49	54	73.5	90
L5	[mm]	--	51	60.5	70	94	111
L6	[mm]	--	10	10.5	10	11	11
L7	[mm]	--	117	137	153	205	239
L8	[mm]	--	32	41	44	63	80
L9	[mm]	--	42	50	68.5	79	95
L10	[mm]	--	118	146.5	181	214	252
L11	[mm]	--	45	56	73	82	100
L12	[mm]	--	73	90.5	108	132	152
L13	[mm]	--	38.1	50.8	63.5	76.2	88.9
L14	[mm]	--	34.5	46.5	57.5	64.5	80.5
L15	[mm]	*1	---	22	22	32	35
L16	[mm]	*2	63	69.5 (71)	94 (96)	110 (111)	125.5 (131)
L17	[mm]	*3	96.5 - 106.5	105 - 115	130.5 - 142.5	151 - 163	165 - 177
L18	[mm]	--	18.5	32.5	40	45.5	46.5
L19	[mm]	--	50.5	58	79	89.5	105
D1 (h8)	[mm]	--	ø64	ø100	ø120	ø134	ø145
D2 (h11)	[mm]	--	ø40	ø50	ø65	ø80	ø90
D3 (H9)	[mm]	--	ø5 x 10	ø5 x 10	ø6 x 10	ø8 x 10	ø8 x 10
D4	[mm]	--	ø28	ø38	ø50	ø60	ø70
D5 (H7)	[mm]	*4	ø16	ø25	ø30	ø35	ø45
T1	[mm]	--	4xM8x12	4xM8x12	4xM8x12	4xM10x15	4xM10x15
T2	[mm]	--	4xM6x9	4xM6x9	4xM8x12	4xM10x15	4xM10x15
T3	[mm]	*5	4xM6x12	8xM6x12	8xM8x16	8xM8x16	8xM10x20
V1 ~ V9	[mm]	*6	Motor attachment dimensions are made to fit your servo motor.				

EJP Dimensions – Hollow Output with Shrink Disk

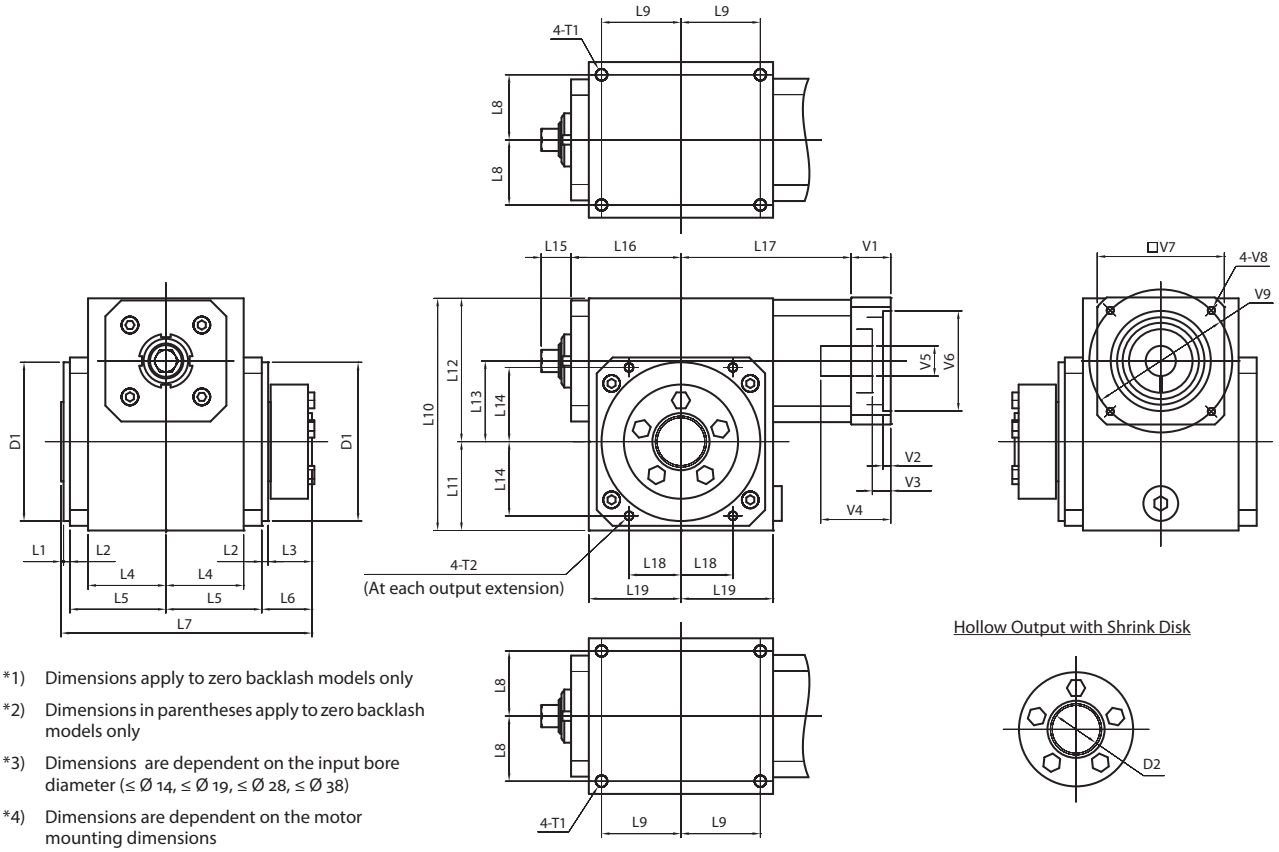

*1) Dimensions apply to zero backlash models only

*2) Dimensions in parentheses apply to zero backlash models only

*3) Dimensions are dependent on the input bore diameter (≤ Ø 14, ≤ Ø 19, ≤ Ø 28, ≤ Ø 38)

*4) Dimensions are dependent on the motor mounting dimensions

Frame Size	Unit	Note	EJP-038	EJP-051	EJP-064	EJP-076	EJP-089
L1	[mm]	--	1	1.5	1.5	2	2
L2	[mm]	--	4	4	4	4	4
L3	[mm]	--	25	27.5	36	37	38.5
L4	[mm]	--	39	49	54	73.5	90
L5	[mm]	--	51	60.5	70	94	111
L6	[mm]	--	29	31.5	40	41	42.5
L7	[mm]	--	136	158	183	235	271
L8	[mm]	--	32	41	44	63	80
L9	[mm]	--	42	50	68.5	79	95
L10	[mm]	--	118	146.5	181	214	252
L11	[mm]	--	45	56	73	82	100
L12	[mm]	--	73	90.5	108	132	152
L13	[mm]	--	38.1	50.8	63.5	76.2	88.9
L14	[mm]	--	34.5	46.5	57.5	64.5	80.5
L15	[mm]	*1	---	22	22	32	35
L16	[mm]	*2	63	69.5 (71)	94 (96)	110 (111)	125.5 (131)
L17	[mm]	*3	96.5 - 106.5	105 - 115	130.5 - 142.5	151 - 163	165 - 177
L18	[mm]	--	18.5	32.5	40	45.5	46.5
L19	[mm]	--	50.5	58	79	89.5	105
D1 (h8)	[mm]	--	ø64	ø100	ø120	ø134	ø145
D2 (H6)	[mm]	--	ø25	ø30	ø35	ø45	ø60
T1	[mm]	--	4xM8x12	4xM8x12	4xM8x12	4xM10x15	4xM10x15
T2	[mm]	--	4xM6x9	4xM6x9	4xM8x12	4xM10x15	4xM10x15
V1 ~ V9	[mm]	*4	Motor attachment dimensions are made to fit your servo motor.				

EJS SERIES

The EJS Series from Nidec Drive Technology Corporation offers features which cannot be found in today's market. Standard adapters are available for easy mounting to both, servo and AC induction motors. Dual bearings on the input shaft ensure proper alignment of the motor and gearbox. This design allows the gearbox to be mounted in any orientation.

Smooth, rounded surfaces help eliminate free-standing water and prevent bacteria growth. IP69K protection combined with 316 stainless steel allows this product to stand up to the harshest production environments. The EJS is the only servo grade right angle gearbox in the market that has been certified 3A, NSF and EHEDG. This product is well suited for applications in meat & poultry, fruits & vegetables, seafood processing, dairy and pharmaceuticals.

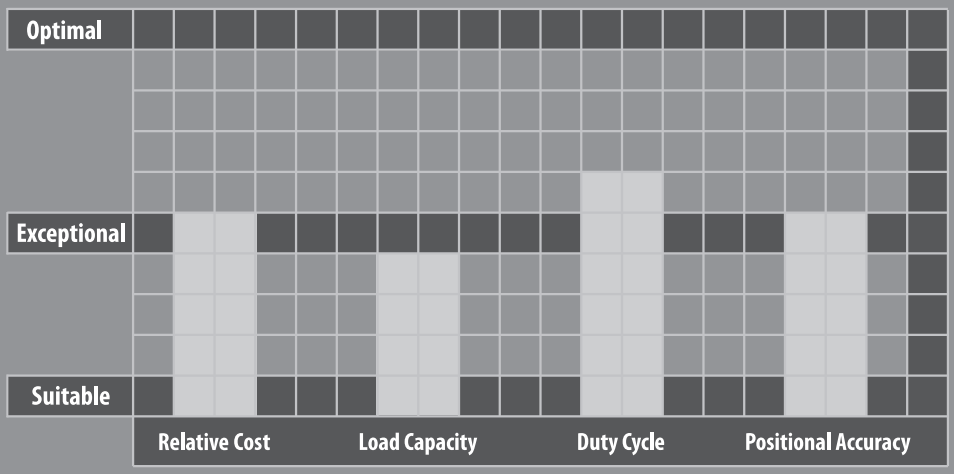

EJS SERIES

- IP69K ingress protection with smooth, rounded 316 stainless housing
- Certified by 3A, NSF and EHEDG
- Easy mounting to stainless steel servo or NEMA motors
- 5 frame sizes with output torque up to 721 Nm

EJS Series Features

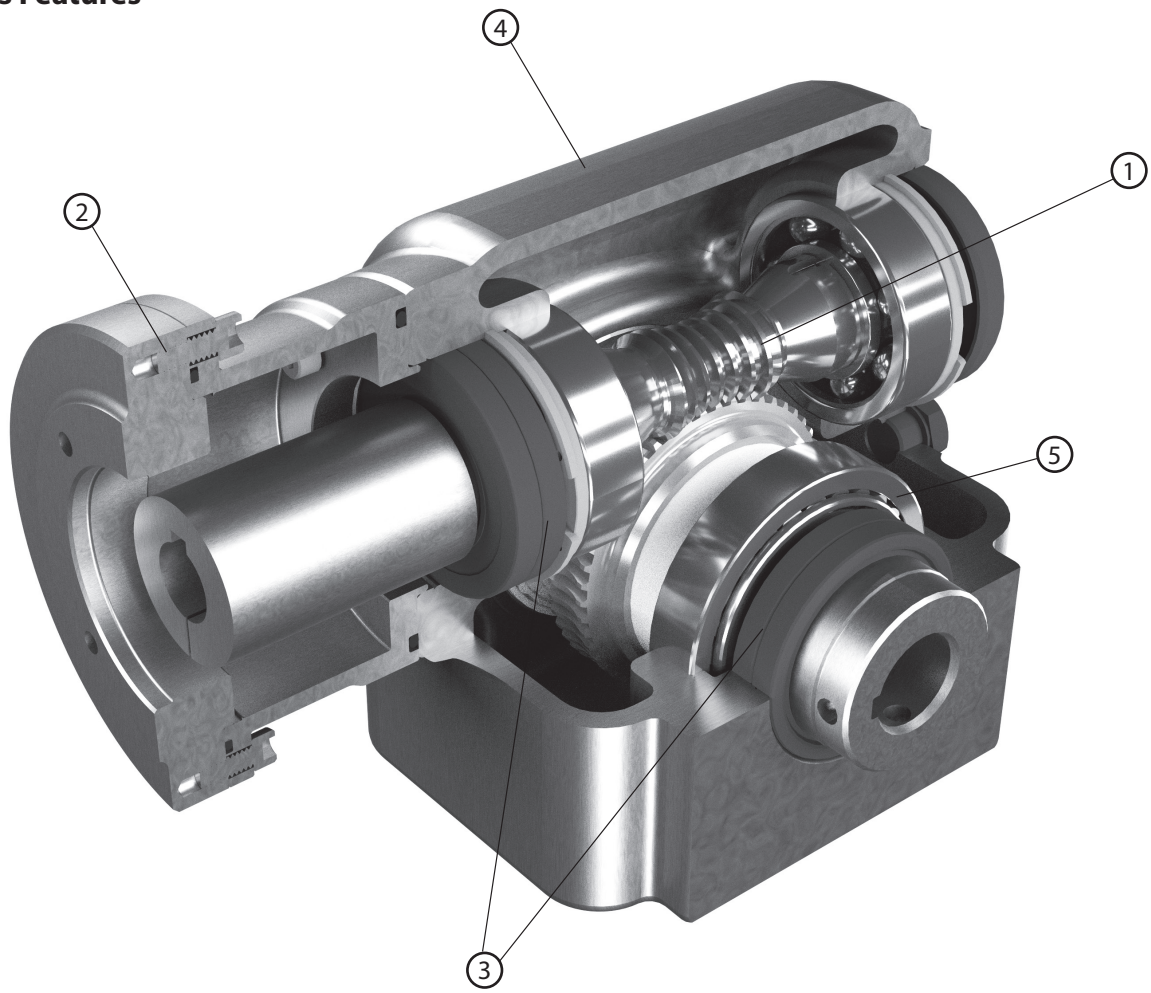

1. Globoidal gear set – between 3-8 teeth in contact at once, allowing 300% shock load capacity
2. Motor adapters designed to fit face mounted stainless steel servo or induction motors
3. Double input and output seals; Nitrile or Viton options
4. Smooth, round stainless steel housing with electro-polished surface
5. Tapered roller bearings

EJS Series Model Code

EJS	-	5 0	-	2 5	-	H 0	0	-	K D	1 6 A	-	B N
(1) Model	-	(2) Frame Szie	-	(3) Ratio	-	(4) Output Shaft	(5) Backlash	-	(6) Motor Mounting		-	(7) Modifications
									Motor Code	Motor Shaft Diameter		

(1) Model

Order Code

EJS	Series

(2) Frame Size

Order Code

39
44
50
60
76

(3) Ratio

Order Code

5	5:1
7	7.5:1
10	10:1
15	15:1
20	20:1
25	25:1
30	30:1
40	40:1
50	50:1
60	60:1

(4) Output Shaft

Order Code

(See the following diagrams)

H0	Hollow Shaft(*1)
SR	Solid Shaft Right
SL	Solid Shaft Left
SW	Solid Double
DR	Hollow Shrink Right
DL	Hollow Shrink Left

(5) Backlash

Order Code

0	Standard
L	Low Backlash

(6)Motor Mounting

Order Code

Motor Code		Motor Shaft Dia.			Motor Brand & Code
-					Shaft-In (no adapter)
C56					NEMA 56C
C140					NEMA 143/145TC
C180					NEMA 182/184TC
A	A	1	6		Allen Bradley MPS-A / B330P
A	B	2	4		Allen Bradley MPS-A / B4540F, VPS-A1304D
A	C	2	8		Allen Bradley MPS-A / B560F, VPS-B1653D
K	A	1	4		Kollmorgen AKMH3 Code AC or AN
K	B	1	4		Kollmorgen AKMH3 Code CC or CN
K	C	1	9		Kollmorgen AKMH4 Code AC or AN
K	D	1	6	A	Kollmorgen AKMH4 Code BK or BN
K	E	1	9		Kollmorgen AKMH4 Code CC or CN
K	F	1	6	A	Kollmorgen AKMH4 Code DK or DN
K	H	2	4		Kollmorgen AKMH5 Code AC or AN
K	I	1	9	A	Kollmorgen AKMH5 Code BK or BN
K	J	1	9	A	Kollmorgen AKMH5 Code DK or DN
K	K	2	4		Kollmorgen AKMH5 Code CC or CN
K	L	2	4		Kollmorgen AKMH5 Code GC or GN
K	M	2	4		Kollmorgen AKMH5 Code HC or HN
K	P	3	2		Kollmorgen AKMH6 Code AC or AN
K	Q	3	2		Kollmorgen AKMH6 Code CC or CN
K	R	2	8	A	Kollmorgen AKMH6, Code DK or DN

(7) Modifications

Order Code

N/A	Standard
H	Foundation Hole Plug
C	External Viton Seals
ML	Mounting Flange - Left
MR	Mounting Flange - Right
FL	Machined Face - Left
FR	Machined Face - Right
N	Inch Solid/Hollow output shaft
B	Feet Base
E	Double Extended Input Sahft
A_	Special

Inch Hollow Bore Size options (*2)

Hollow Bore Size	39	44	50	60	76
0.625"	•				
0.875"	•	•			
1.000"	A	•	•	•	
1.125"		•	•	•	
1.188"			•	•	
1.250"		A	•	•	
1.438"			A	A	•
1.750"					•
1.938"					•
2.188"					A

Notes:

*1) See inch hollow bore size option table.

*2) Hollow bore options option for each frame size. "A" is standard.

Output Shaft Orientation

SL : Solid Shaft Left

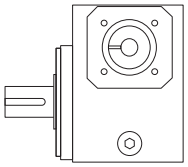

SR : Solid Shaft Right

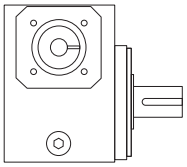

SW : Solid Shaft Double

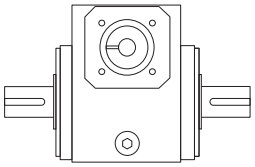

EJS 039 1-Stage Specifications

Frame Size		039				
Ratio	--	5	7.5	10	15	20
Nominal Output Torque	[Nm]	42	52	58	70	70
Maximum Acceleration Torque	[Nm]	56	70	78	93	91
Emergency Stop Torque	[Nm]	84	104	117	141	139
No Load Running Torque *1	[Nm]	0.45				
Nominal Input Speed	[rpm]	2,000				
Maximum Continuous Input Speed	[rpm]	3,000				
Maximum Cyclic Input Speed	[rpm]	3,000				
Maximum Radial Load *2	[N]	2,670				
Maximum Axial Load *3	[N]	2,670				
Moment of Inertia	[kgcm2]	1.05	0.93	0.89	0.86	0.85
Efficiency *4	[%]	92	91	90	88	85
Torsional Rigidity	[Nm/arcmin]	5.8				
Maximum Torsional Backlash (Standard)	[Arc-min]	≤ 24				
Maximum Torsional Backlash (Low)	[Arc-min]	≤ 8				
Noise Level *5	dB [A]	≤ 73				
Weight *6	[kg]	14				
Ambient Temperature	[°C]	-23 ~ 93				
Permitted Housting Temperature	[°C]	100				
Service Life	[Hours]	20,000				
Protection Class	--	IP 69K				
Lubrication	--	Synthetic Food Grade Oil				
Mounting Position	--	Any				

*1) Torque at no load applied to the input shaft at 2,000 rpm
*2) The maximum radial load the gearbox can accept
*3) The maximum axial load the gearbox can accept
*4) The efficiency at the nominal output torque rating
*5) Measured with no load applied to the input shaft at 2,000 rpm
*6) Weight may vary slightly between models

EJS 039 1-Stage Specifications

Frame Size	039					
Ratio	--	25	30	40	50	60
Nominal Output Torque	[Nm]	70	66	63	61	59
Maximum Acceleration Torque	[Nm]	91	87	83	80	77
Emergency Stop Torque	[Nm]	139	133	127	122	118
No Load Running Torque *1	[Nm]	0.45				
Nominal Input Speed	[rpm]	2,000				
Maximum Continuous Input Speed	[rpm]	3,000				
Maximum Cyclic Input Speed	[rpm]	3,000				
Maximum Radial Load *2	[N]	2,670				
Maximum Axial Load *3	[N]	2,670				
Moment of Inertia	[kgcm2]	0.85	0.85	0.85	0.84	0.84
Efficiency *4	[%]	84	80	76	73	70
Torsional Rigidity	[Nm/arcmin]	5.8				
Maximum Torsional Backlash (Standard)	[Arc-min]	≤ 24				
Maximum Torsional Backlash (Low)	[Arc-min]	≤ 8				
Noise Level *5	dB [A]	≤ 73				
Weight *6	[kg]	14				
Ambient Temperature	[°C]	-23 ~ 93				
Permitted Housting Temperature	[°C]	100				
Service Life	[Hours]	20,000				
Protection Class	--	IP 69K				
Lubrication	--	Synthetic Food Grade Oil				
Mounting Position	--	Any				

*1) Torque at no load applied to the input shaft at 2,000 rpm

*2) The maximum radial load the gearbox can accept

*3) The maximum axial load the gearbox can accept

*4) The efficiency at the nominal output torque rating

*5) Measured with no load applied to the input shaft at 2,000 rpm

*6) Weight may vary slightly between models

EJS 044 1-Stage Specifications

Frame Size	044					
Ratio	Units	5	7.5	10	15	20
Nominal Output Torque	[Nm]	58	72	81	92	91
Maximum Acceleration Torque	[Nm]	78	97	108	122	120
Emergency Stop Torque	[Nm]	116	144	162	183	181
No Load Running Torque *1	[Nm]	0.68				
Nominal Input Speed	[rpm]	2,000				
Maximum Continuous Input Speed	[rpm]	3,000				
Maximum Cyclic Input Speed	[rpm]	3,000				
Maximum Radial Load *2	[N]	4,895				
Maximum Axial Load *3	[N]	4,895				
Moment of Inertia	[kgcm²]	1.36	1.16	1.08	1.03	1.01
Efficiency *4	[%]	92	91	90	88	85
Torsional Rigidity	[Nm/arcmin]	7.6				
Maximum Torsional Backlash (Standard)	[Arc-min]	≤ 20				
Maximum Torsional Backlash (Low)	[Arc-min]	≤ 7				
Noise Level *5	dB [A]	≤ 75				
Weight *6	[kg]	15.5				
Ambient Temperature	[°C]	-23 ~ 93				
Permitted Housting Temperature	[°C]	100				
Service Life	[Hours]	20,000				
Protection Class	--	IP 69K				
Lubrication	--	Synthetic Food Grade Oil				
Mounting Position	--	Any				

*1) Torque at no load applied to the input shaft at 2,000 rpm
*2) The maximum radial load the gearbox can accept
*3) The maximum axial load the gearbox can accept
*4) The efficiency at the nominal output torque rating
*5) Measured with no load applied to the input shaft at 2,000 rpm
*6) Weight may vary slightly between models

EJS 044 1-Stage Specifications

Frame Size	**044**					
Ratio	Units	25	30	40	50	60
Nominal Output Torque	[Nm]	90	92	88	85	82
Maximum Acceleration Torque	[Nm]	96	120	115	111	106
Emergency Stop Torque	[Nm]	179	184	176	170	163
No Load Running Torque *1	[Nm]	0.68				
Nominal Input Speed	[rpm]	2,000				
Maximum Continuous Input Speed	[rpm]	3,000				
Maximum Cyclic Input Speed	[rpm]	3,000				
Maximum Radial Load *2	[N]	4,895				
Maximum Axial Load *3	[N]	4,895				
Moment of Inertia	[kgcm2]	1.01	1.00	1.00	1.00	0.99
Efficiency *4	[%]	84	80	76	73	70
Torsional Rigidity	[Nm/arcmin]	7.6				
Maximum Torsional Backlash (Standard)	[Arc-min]	≤ 20				
Maximum Torsional Backlash (Low)	[Arc-min]	≤ 7				
Noise Level *5	dB [A]	≤ 75				
Weight *6	[kg]	15.5				
Ambient Temperature	[°C]	-23 ~ 93				
Permitted Housting Temperature	[°C]	100				
Service Life	[Hours]	20,000				
Protection Class	--	IP 69K				
Lubrication	--	Synthetic Food Grade Oil				
Mounting Position	--	Any				

*1) Torque at no load applied to the input shaft at 2,000 rpm

*2) The maximum radial load the gearbox can accept

*3) The maximum axial load the gearbox can accept

*4) The efficiency at the nominal output torque rating

*5) Measured with no load applied to the input shaft at 2,000 rpm

*6) Weight may vary slightly between models

EJS 050 1-Stage Specifications

Frame Size		050				
Ratio	--	5	7.5	10	15	20
Nominal Output Torque	[Nm]	77	96	108	130	129
Maximum Acceleration Torque	[Nm]	104	130	144	172	168
Emergency Stop Torque	[Nm]	155	193	216	260	258
No Load Running Torque *1	[Nm]	0.74				
Nominal Input Speed	[rpm]	2,000				
Maximum Continuous Input Speed	[rpm]	3,000				
Maximum Cyclic Input Speed	[rpm]	3,000				
Maximum Radial Load *2	[N]	5,340				
Maximum Axial Load *3	[N]	5,340				
Moment of Inertia (≤ Ø19)	[kgcm2]	2.54	2.18	2.05	1.96	1.93
Efficiency *4	[%]	92	91	90	88	85
Torsional Rigidity	[Nm/arcmin]	10.4				
Maximum Torsional Backlash (Standard)	[Arc-min]	≤ 15				
Maximum Torsional Backlash (Low)	[Arc-min]	≤ 6				
Noise Level *5	dB [A]	≤ 80				
Weight *6	[kg]	16				
Ambient Temperature	[°C]	-23 ~ 93				
Permitted Housting Temperature	[°C]	100				
Service Life	[Hours]	20,000				
Protection Class	--	IP 69K				
Lubrication	--	Synthetic Food Grade Oil				
Mounting Position	--	Any				

*1) Torque at no load applied to the input shaft at 2,000 rpm

*2) The maximum radial load the gearbox can accept

*3) The maximum axial load the gearbox can accept

*4) The efficiency at the nominal output torque rating

*5) Measured with no load applied to the input shaft at 2,000 rpm

*6) Weight may vary slightly between models

EJS 050 1-Stage Specifications

Frame Size	050					
Ratio	--	25	30	40	50	60
Nominal Output Torque	[Nm]	129	123	117	113	109
Maximum Acceleration Torque	[Nm]	168	161	154	148	142
Emergency Stop Torque	[Nm]	258	246	234	226	218
No Load Running Torque *1	[Nm]	0.74				
Nominal Input Speed	[rpm]	2,000				
Maximum Continuous Input Speed	[rpm]	3,000				
Maximum Cyclic Input Speed	[rpm]	3,000				
Maximum Radial Load *2	[N]	5,340				
Maximum Axial Load *3	[N]	5,340				
Moment of Inertia (≤ Ø19)	[kgcm2]	1.92	1.91	1.90	1.90	1.89
Efficiency *4	[%]	84	80	76	73	70
Torsional Rigidity	[Nm/arcmin]	10.4				
Maximum Torsional Backlash (Standard)	[Arc-min]	≤ 15				
Maximum Torsional Backlash (Low)	[Arc-min]	≤ 6				
Noise Level *5	dB [A]	≤ 80				
Weight *6	[kg]	16				
Ambient Temperature	[°C]	-23 ~ 93				
Permitted Housting Temperature	[°C]	100				
Service Life	[Hours]	20,000				
Protection Class	--	IP 69K				
Lubrication	--	Synthetic Food Grade Oil				
Mounting Position	--	Any				

*1) Torque at no load applied to the input shaft at 2,000 rpm

*2) The maximum radial load the gearbox can accept

*3) The maximum axial load the gearbox can accept

*4) The efficiency at the nominal output torque rating

*5) Measured with no load applied to the input shaft at 2,000 rpm

*6) Weight may vary slightly between models

EJS 060 1-Stage Specifications

Frame Size		**060**				
Ratio	--	5	7.5	10	15	20
Nominal Output Torque	[Nm]	123	154	172	188	175
Maximum Acceleration Torque	[Nm]	170	212	227	235	276
Emergency Stop Torque	[Nm]	246	308	344	376	350
No Load Running Torque *1	[Nm]	0.79				
Nominal Input Speed	[rpm]	2,000				
Maximum Continuous Input Speed	[rpm]	3,000				
Maximum Cyclic Input Speed	[rpm]	3,000				
Maximum Radial Load *2	[N]	8,010				
Maximum Axial Load *3	[N]	8,010				
Moment of Inertia (≤ Ø19)	[kgcm2]	3.48	2.77	2.52	2.35	2.28
Efficiency *4	[%]	92	91	90	88	85
Torsional Rigidity	[Nm/arcmin]	17.7				
Maximum Torsional Backlash (Standard)	[Arc-min]	≤ 13				
Maximum Torsional Backlash (Low)	[Arc-min]	≤ 5				
Noise Level *5	dB [A]	≤ 80				
Weight *6	[kg]	21				
Ambient Temperature	[°C]	-23 ~ 93				
Permitted Housting Temperature	[°C]	100				
Service Life	[Hours]	20,000				
Protection Class	--	IP 69K				
Lubrication	--	Synthetic Food Grade Oil				
Mounting Position	--	Any				

*1) Torque at no load applied to the input shaft at 2,000 rpm

*2) The maximum radial load the gearbox can accept

*3) The maximum axial load the gearbox can accept

*4) The efficiency at the nominal output torque rating

*5) Measured with no load applied to the input shaft at 2,000 rpm

*6) Weight may vary slightly between models

EJS 060 1-Stage Specifications

Frame Size	**060**					
Ratio	--	25	30	40	50	60
Nominal Output Torque	[Nm]	172	175	173	174	173
Maximum Acceleration Torque	[Nm]	230	229	232	243	225
Emergency Stop Torque	[Nm]	344	350	346	348	346
No Load Running Torque *1	[Nm]	0.79				
Nominal Input Speed	[rpm]	2,000				
Maximum Continuous Input Speed	[rpm]	3,000				
Maximum Cyclic Input Speed	[rpm]	3,000				
Maximum Radial Load *2	[N]	8,010				
Maximum Axial Load *3	[N]	8,010				
Moment of Inertia (≤ Ø19)	[kgcm2]	2.26	2.24	2.22	2.22	2.21
Efficiency *4	[%]	84	80	76	73	70
Torsional Rigidity	[Nm/arcmin]	17.7				
Maximum Torsional Backlash (Standard)	[Arc-min]	≤ 13				
Maximum Torsional Backlash (Low)	[Arc-min]	≤ 5				
Noise Level *5	dB [A]	≤ 80				
Weight *6	[kg]	21				
Ambient Temperature	[°C]	-23 ~ 93				
Permitted Housting Temperature	[°C]	100				
Service Life	[Hours]	20,000				
Protection Class	--	IP 69K				
Lubrication	--	Synthetic Food Grade Oil				
Mounting Position	--	Any				

*1) Torque at no load applied to the input shaft at 2,000 rpm

*2) The maximum radial load the gearbox can accept

*3) The maximum axial load the gearbox can accept

*4) The efficiency at the nominal output torque rating

*5) Measured with no load applied to the input shaft at 2,000 rpm

*6) Weight may vary slightly between models

EJS 076 1-Stage Specifications

Frame Size	076					
Ratio	--	5	7.5	10	15	20
Nominal Output Torque	[Nm]	237	300	345	385	381
Maximum Acceleration Torque	[Nm]	330	420	476	517	502
Emergency Stop Torque	[Nm]	474	600	690	770	762
No Load Running Torque *1	[Nm]	1.24				
Nominal Input Speed	[rpm]	2,000				
Maximum Continuous Input Speed	[rpm]	3,000				
Maximum Cyclic Input Speed	[rpm]	3,000				
Maximum Radial Load *2	[N]	10,235				
Maximum Axial Load *3	[N]	10,235				
Moment of Inertia (≤ Ø19)	[kgcm2]	13.98	10.74	9.6	8.79	8.51
Efficiency *4	[%]	92	91	90	88	85
Torsional Rigidity	[Nm/arcmin]	41.6				
Maximum Torsional Backlash (Standard)	[Arc-min]	≤ 10				
Maximum Torsional Backlash (Low)	[Arc-min]	≤ 4				
Noise Level *5	dB [A]	≤ 83				
Weight *6	[kg]	41				
Ambient Temperature	[°C]	-23 ~ 93				
Permitted Housting Temperature	[°C]	100				
Service Life	[Hours]	20,000				
Protection Class	--	IP 69K				
Lubrication	--	Synthetic Food Grade Oil				
Mounting Position	--	Any				

*1) Torque at no load applied to the input shaft at 2,000 rpm
*2) The maximum radial load the gearbox can accept
*3) The maximum axial load the gearbox can accept
*4) The efficiency at the nominal output torque rating
*5) Measured with no load applied to the input shaft at 2,000 rpm
*6) Weight may vary slightly between models

EJS 076 1-Stage Specifications

Frame Size	076					
Ratio	--	25	30	40	50	60
Nominal Output Torque	[Nm]	396	393	375	361	347
Maximum Acceleration Torque	[Nm]	519	535	511	493	473
Emergency Stop Torque	[Nm]	792	786	750	722	694
No Load Running Torque *1	[Nm]	1.24				
Nominal Input Speed	[rpm]	2,000				
Maximum Continuous Input Speed	[rpm]	3,000				
Maximum Cyclic Input Speed	[rpm]	3,000				
Maximum Radial Load *2	[N]	10,235				
Maximum Axial Load *3	[N]	10,235				
Moment of Inertia (≤ Ø19)	[kgcm2]	8.38	8.31	8.23	8.20	8.18
Efficiency *4	[%]	84	80	76	73	70
Torsional Rigidity	[Nm/arcmin]	41.6				
Maximum Torsional Backlash (Standard)	[Arc-min]	≤ 10				
Maximum Torsional Backlash (Low)	[Arc-min]	≤ 4				
Noise Level *5	dB [A]	≤ 83				
Weight *6	[kg]	41				
Ambient Temperature	[°C]	-23 ~ 93				
Permitted Housting Temperature	[°C]	100				
Service Life	[Hours]	20,000				
Protection Class	--	IP 69K				
Lubrication	--	Synthetic Food Grade Oil				
Mounting Position	--	Any				

*1) Torque at no load applied to the input shaft at 2,000 rpm

*2) The maximum radial load the gearbox can accept

*3) The maximum axial load the gearbox can accept

*4) The efficiency at the nominal output torque rating

*5) Measured with no load applied to the input shaft at 2,000 rpm

*6) Weight may vary slightly between models

EJS Dimensions – Hollow Output Shaft

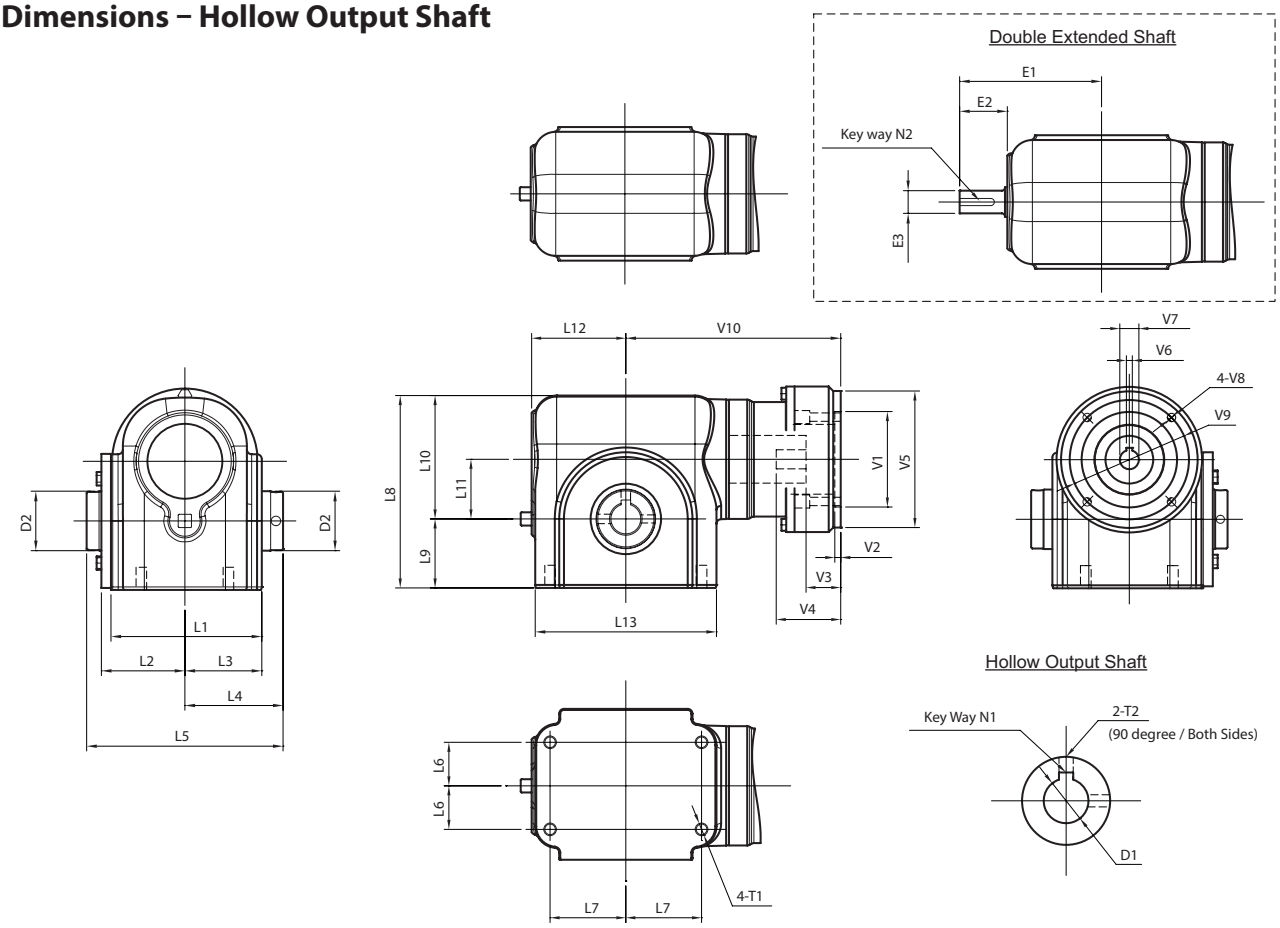

Frame Size	Unit	EJS39	EJS44	EJS50	EJS60	EJS76
L1	[mm]	116.6	121.7	126.5	132.6	172.5
L2	[mm]	65.0	67.6	70.1	72.9	95.0
L3	[mm]	59.4	62.2	64.5	67.6	87.4
L4	[mm]	77.2	79.8	82.3	85.3	109.7
L5	[mm]	154.7	159.8	164.6	170.7	219.5
L6	[mm]	34.9	34.9	36.4	36.4	50.8
L7	[mm]	53.1	53.1	63.5	63.5	88.9
L8	[mm]	138.4	148.3	161.3	177.3	229.6
L9	[mm]	48.5	52.3	57.9	64.0	82.6
L10	[mm]	89.9	96.0	103.4	113.3	147.1
L11	[mm]	39.1	44.5	50.0	59.7	76.2
L12	[mm]	72.4	78.0	79.0	87.4	115.6
L13	[mm]	140.0	151.9	151.9	156.0	210.1
D1	[mm]	φ19	φ20	φ25	φ28	φ35
D2	[mm]	φ40	φ45	φ50	φ55	φ75
Key way N1	[mm]	6.0x3.0	6.0x3.0	8.0x4.0	8.0x4.0	10x4.4
T1	[mm]	M8x12	M8x12	M10x15	M10x15	M12x19.5
T2	[mm]	5/16-24	5/16-24	5/16-24	5/16-24	5/16-24
E1	[mm]	117.1	123.4	126.5	134.1	193.8
E2	[mm]	44.7	45.5	47.5	46.7	78.2
E3	[Inch]	0.75	0.75	0.75	0.75	1.19
Key way N2	[Inch]	3/16x3/32	3/16x3/32	3/16x3/32	3/16x3/32	1/8x1/4
V1 ~ V10	Motor attachment dimensions are made to fit your servo motor.					

EJS Dimensions – Solid Output Shaft

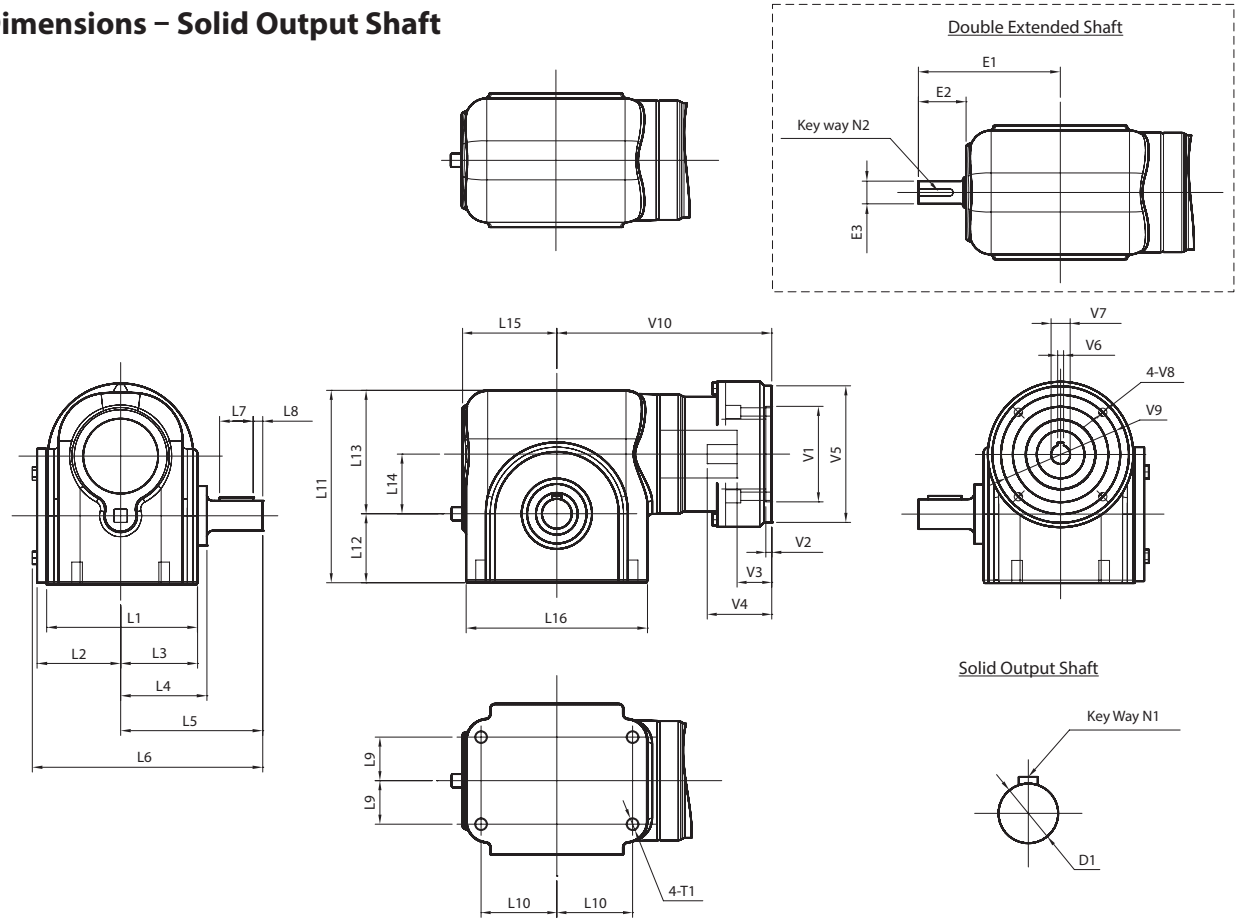

Frame Size	Unit	EJS39	EJS44	EJS50	EJS60	EJS76
L1	[mm]	116.6	121.7	126.5	132.6	172.5
L2	[mm]	65.0	67.6	70.1	72.9	95.0
L3	[mm]	59.4	62.2	64.5	67.6	87.4
L4	[mm]	67.3	69.9	72.4	69.6	100.1
L5	[mm]	109.5	109.5	119.1	129.3	174.0
L6	[mm]	178.6	181.1	193.3	206.2	274.3
L7	[mm]	22	22	28	32	40
L8	[mm]	7	7	8	8	10
L9	[mm]	34.9	34.9	36.4	36.4	50.8
L10	[mm]	53.2	53.2	63.5	63.5	88.9
L11	[mm]	138.4	148.3	161.3	177.3	229.6
L12	[mm]	48.5	52.3	57.9	64.0	82.6
L13	[mm]	89.9	96.0	103.4	113.3	147.1
L14	[mm]	39.1	44.5	50.0	59.7	76.2
L15	[mm]	72.4	78.0	79.0	87.4	115.6
L16	[mm]	140.0	151.9	151.9	156.0	210.1
D1	[mm]	φ18	φ20	φ25	φ28	φ35
Key way N1	[mm]	6.0x3.0	6.0x3.0	8.0x4.0	8.0x4.0	10x4.4
T1	[mm]	M8x12	M8x12	M10x15	M10x15	M12x19.5
E1	[mm]	117.1	123.4	126.5	134.1	193.8
E2	[mm]	44.7	45.5	47.5	46.7	78.2
E3	[mm]	0.75	0.75	0.75	0.75	1.19
Key way N2	[Inch]	3/16x3/32	3/16x3/32	3/16x3/32	3/16x3/32	1/8x1/4
V1 ~ V10	Motor attachment dimensions are made to fit your servo motor.					

EJS Dimensions – Shrink Disc Hollow Output Shaft

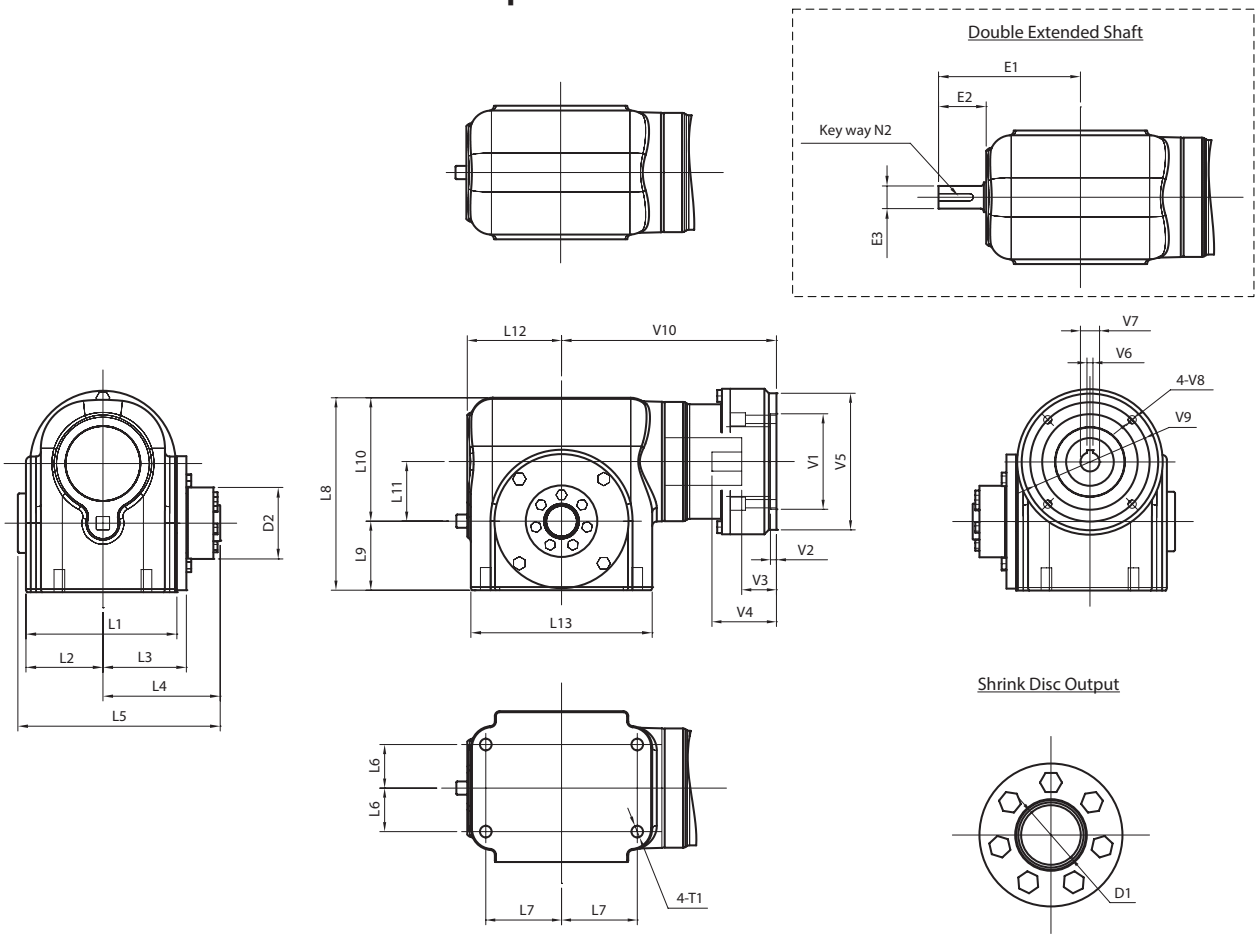

Frame Size	Uinits	EJS39	EJS44	EJS50	EJS60	EJS76
L1	[mm]	116.6	121.7	126.5	132.6	172.5
L2	[mm]	65.0	67.6	70.1	72.9	95.0
L3	[mm]	59.4	62.2	64.5	67.6	87.4
L4	[mm]	93.2	95.8	98.3	102.9	128.5
L5	[mm]	159.5	164.6	169.7	177.3	226.1
L6	[mm]	34.9	34.9	36.4	36.4	50.8
L7	[mm]	53.2	53.2	63.5	63.5	88.9
L8	[mm]	138.4	148.3	161.3	177.3	229.6
L9	[mm]	48.5	52.3	57.9	64.0	82.6
L10	[mm]	89.9	96.0	103.4	113.3	147.1
L11	[mm]	39.1	44.5	50.0	59.7	76.2
L12	[mm]	72.4	78.0	79.0	87.4	115.6
L13	[mm]	140.0	151.9	151.9	156.0	210.1
D1	[mm]	φ25/φ25.008	φ25/φ25.008	φ25/φ25.008	φ30/φ30.008	φ35.002/φ35.018
D2	[mm]	φ60	φ60	φ60	φ72	φ80
T1	[mm]	M8x12	M8x12	M10x15	M10x15	M12x19.5
E1	[mm]	117.1	123.4	126.5	134.1	193.8
E2	[mm]	44.7	45.5	47.5	46.7	78.2
E3	[mm]	0.75	0.75	0.75	0.75	1.19
Key way N2	[Inch]	3/16x3/32	3/16x3/32	3/16x3/32	3/16x3/32	1/8x1/4
V1 ~ V10	Motor attachment dimensions are made to fit your servo motor.					

EJS Dimensions – Optional Mounting Flange

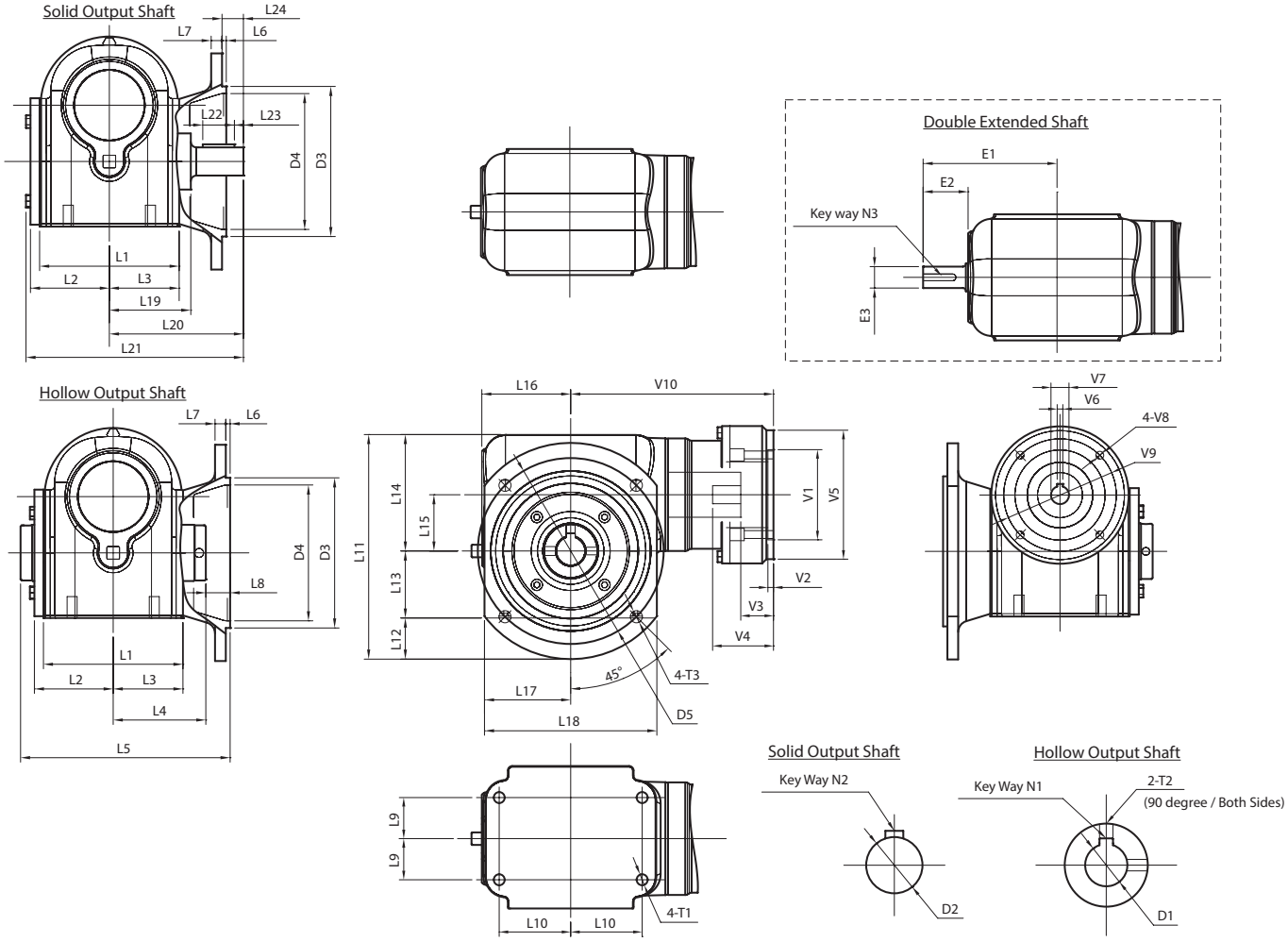

Frame Size	Units	EJS39	EJS44	EJS50	EJS60	EJS76
L1	[mm]	116.6	121.7	126.5	132.6	172.5
L2	[mm]	65.0	67.6	70.1	72.9	95.0
L3	[mm]	59.4	62.2	64.5	67.6	87.4
L4	[mm]	77.2	79.8	82.3	85.3	109.7
L5	[mm]	170	176	186	202	253
L6	[mm]	3.8	3.8	3.8	3.8	3.8
L7	[mm]	9.7	9.7	9.7	9.7	9.7
L8	[mm]	15.7	16.0	21.6	31.5	33.8
L9	[mm]	34.9	34.9	36.4	36.4	50.8
L10	[mm]	53.2	53.2	63.5	63.5	88.9
L11	[mm]	176.3	184.2	199.4	230.6	290.3
L12	[mm]	39.6	35.8	38.1	51.8	60.7
L13	[mm]	48.5	52.3	57.9	64.0	82.6
L14	[mm]	88.1	96	103.4	115.3	147
L15	[mm]	39.1	44	50.0	59.7	76
L16	[mm]	72.4	78	79.0	87.4	116
L17	[mm]	70	70	76.7	92.5	112
L18	[mm]	140.5	140.5	153.2	185.2	223.3
L19	[mm]	67.3	69.9	72.4	69.6	100.1
L20	[mm]	109.5	109.5	119.1	129.3	174.0

Note: Continue Frame Sizes for Optional Mounting Flange on the next page

EJS Dimensions – Optional Mounting Flange

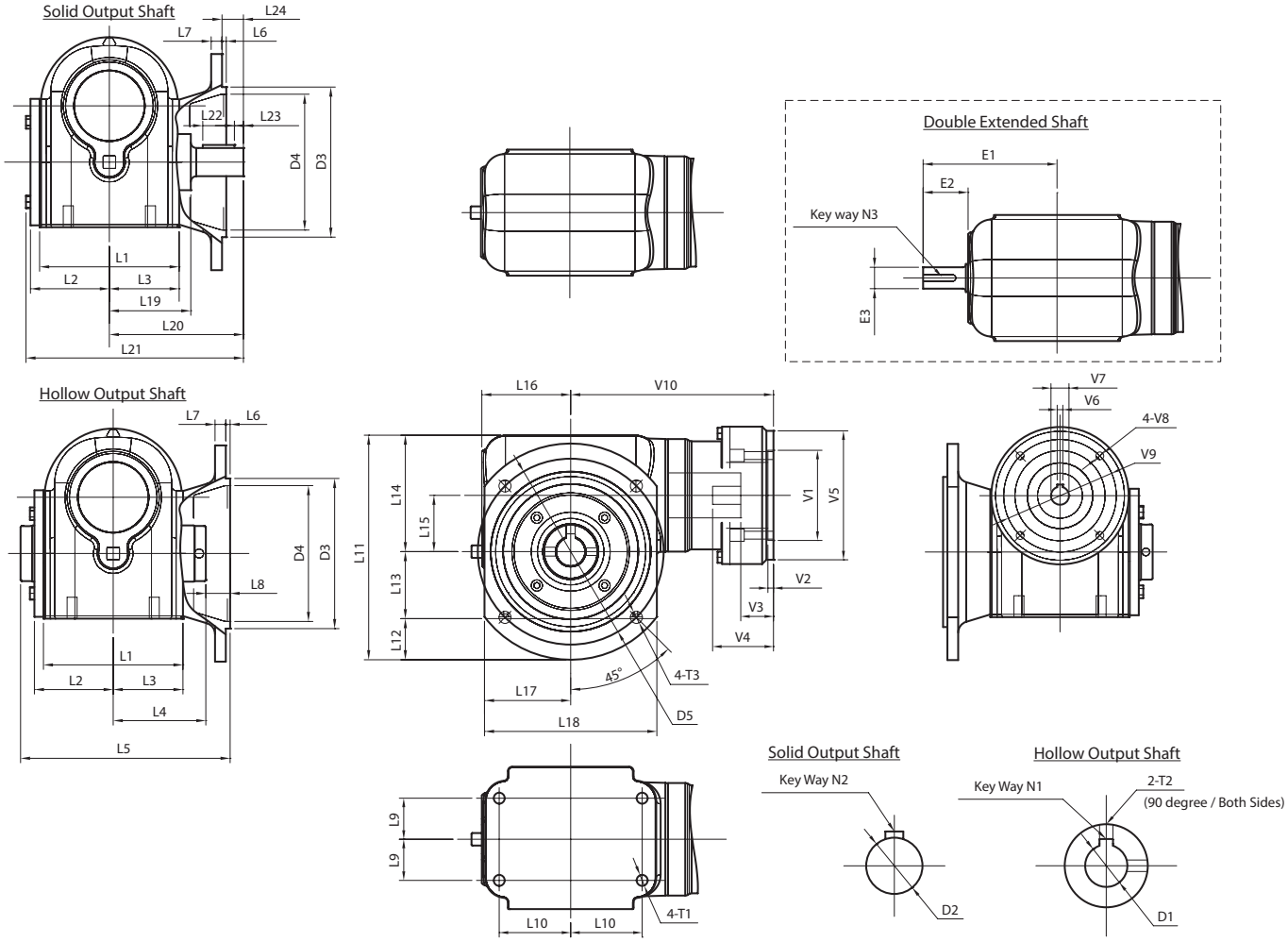

Frame Size	Units	EJS39	EJS44	EJS50	EJS60	EJS76
L21	[mm]	178.6	181.1	193.3	206.2	274.3
L22	[mm]	22	22	28	32	40
L23	[mm]	7	7	8	8	10
L24	[mm]	20.1	17.5	19.1	16.3	34.3
T1	[mm]	M8x12	M8x12	M10x15	M10x15	M12x19.5
D1	[mm]	φ19	φ20	φ25	φ28	φ35
Key way N1	[mm]	6.0x3.0	6.0x3.0	8.0x4.0	8.0x4.0	10x4.4
T2	[mm]	5/16-24	5/16-24	5/16-24	5/16-24	5/16-24
D2	[mm]	φ18	φ20	φ25	φ28	φ35
Key way N2	[mm]	6.0x3.0	6.0x3.0	8.0x4.0	8.0x4.0	10x4.4
D3	[mm]	φ114.3	φ114.3	φ133.4	φ165.1	φ203.2
D4	[mm]	φ103.1	φ103.1	φ120.7	φ142.7	φ182.6
D5	[mm]	φ149.35	φ149.35	φ165.1	φ203.2	φ254
T3	[mm]	9.2	9.2	9.2	9.2	9.2
E1	[mm]	117.1	123.4	126.5	134.1	193.8
E2	[mm]	44.7	45.5	47.5	46.7	78.2
E3	[mm]	0.75	0.75	0.75	0.75	1.19
Key way N3	[Inch]	3/16x3/32	3/16x3/32	3/16x3/32	3/16x3/32	1/8x1/4
V1 ~ V10	Motor attachment dimensions are made to fit your servo motor.					

EJS Dimensions – Side Mount (w/o Flange Mounting)

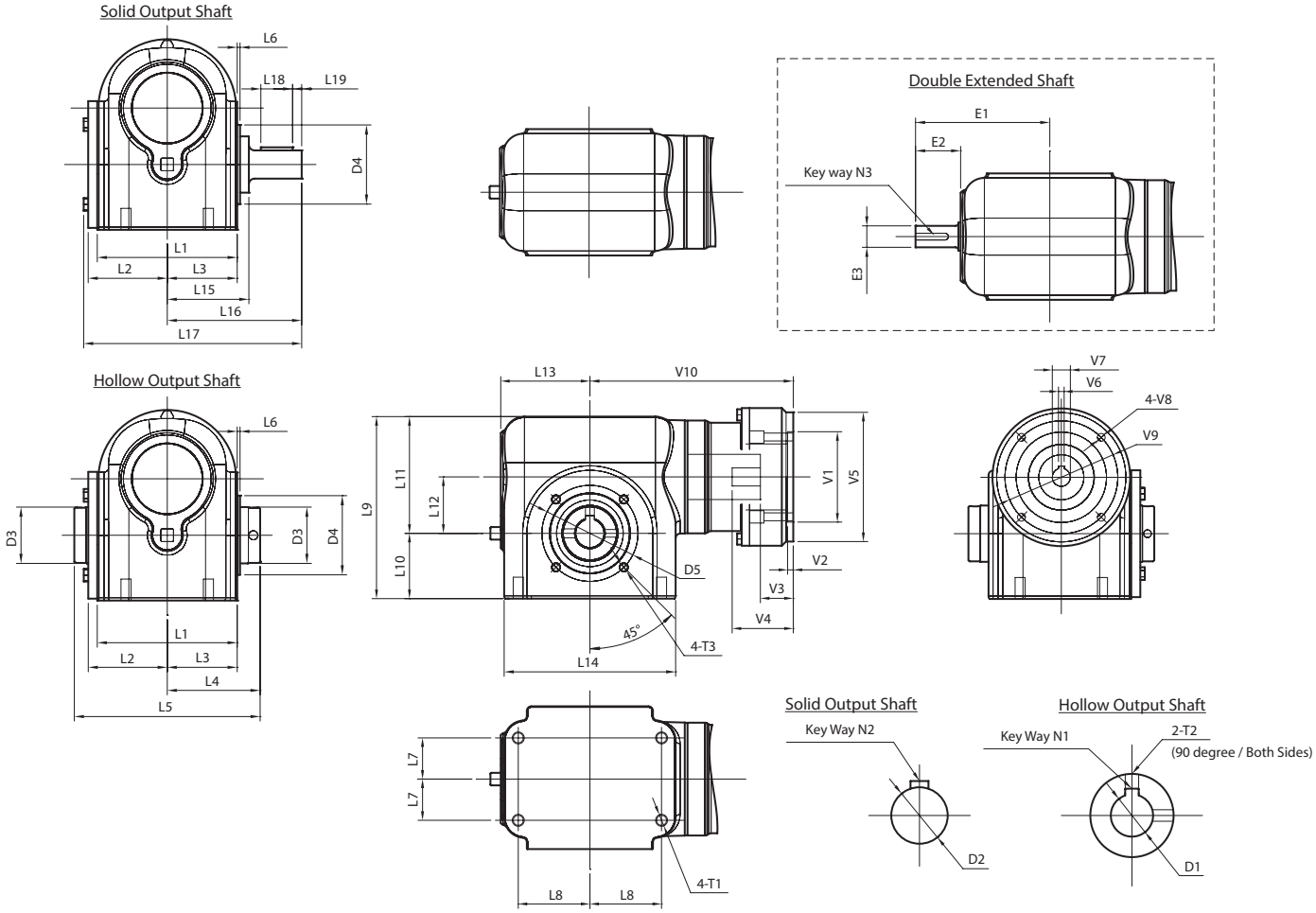

Frame Size	Units	EJS39	EJS44	EJS50	EJS60	EJS76
L1	[mm]	116.6	121.7	126.5	132.6	172.5
L2	[mm]	65.0	67.6	70.1	72.9	95.0
L3	[mm]	59.4	62.2	64.5	67.6	87.4
L4	[mm]	77.2	79.8	82.3	85.3	109.7
L5	[mm]	154.7	159.8	164.6	170.7	219.5
L6	[mm]	2.5	2.5	2.5	2.5	2.5
L7	[mm]	34.9	34.9	36.4	36.4	50.8
L8	[mm]	53.2	53.2	63.5	63.5	88.9
L9	[mm]	138.4	148.3	161.3	177.3	229.6
L10	[mm]	48.5	52.3	57.9	64.0	82.6
L11	[mm]	89.9	96.0	103.4	113.3	147.1
L12	[mm]	39.1	44.5	50.0	59.7	76.2
L13	[mm]	72.4	78.0	79.0	87.4	115.6
L14	[mm]	140.0	151.9	151.9	156.0	210.1
L15	[mm]	67.3	69.9	72.4	69.6	100.1
L16	[mm]	109.5	109.5	119.1	129.3	174.0
L17	[mm]	178.6	181.1	193.3	206.2	274.3

Note: Continue Frame Sizes for Side Mount (w/o Flange Mounting) on the next page

EJS Dimensions – Side Mount (w/o Flange Mounting)

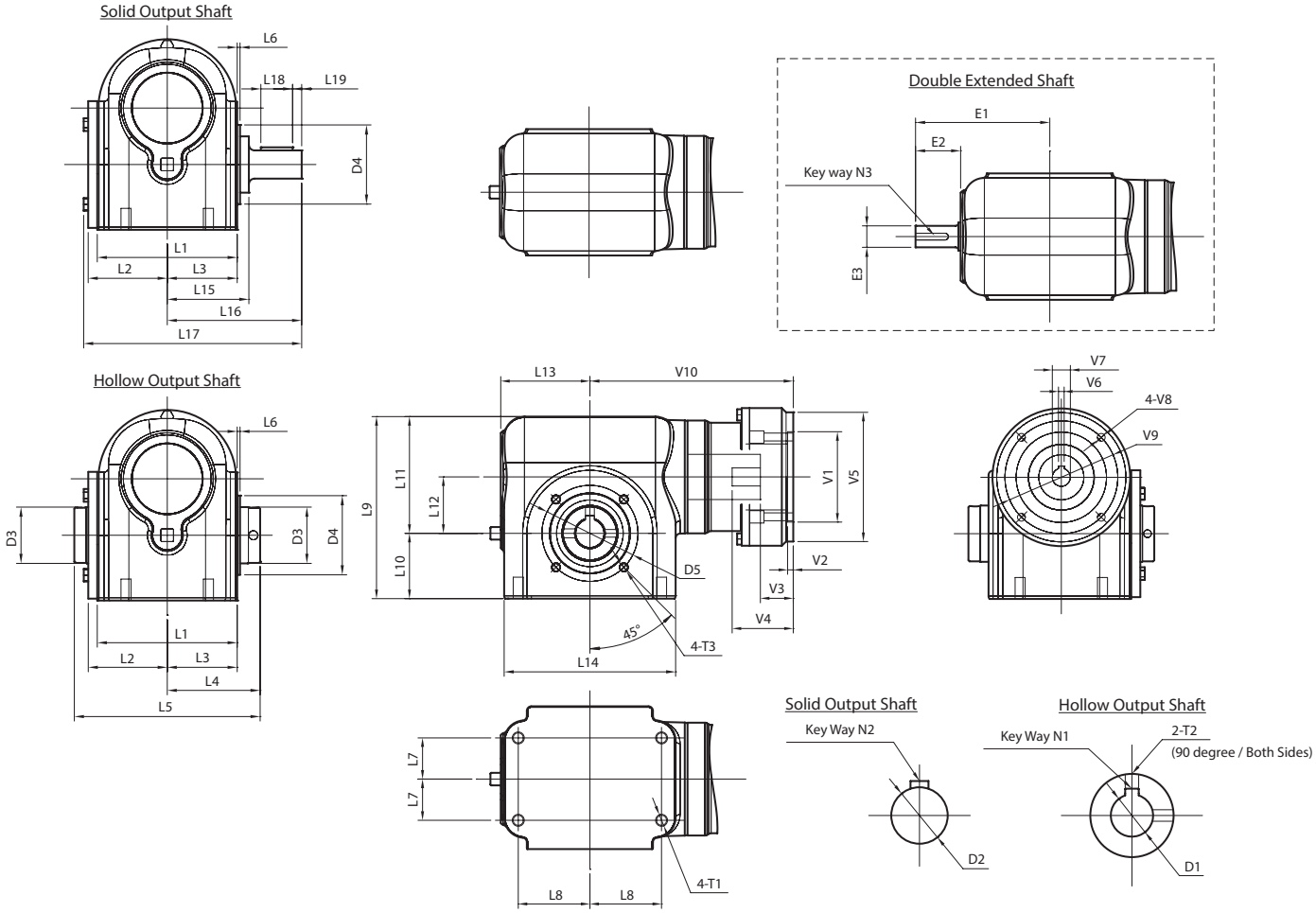

Frame Size	Units	EJS39	EJS44	EJS50	EJS60	EJS76
L18	[Inch]	22	22	28	32	40
L19	[mm]	7	7	8	8	10
T1	[mm]	M8x12	M8x12	M10x15	M10x15	M12x19.5
D1	[mm]	φ19	φ20	φ25	φ28	φ35
Key way N1	[mm]	6.0x3.0	6.0x3.0	8.0x4.0	8.0x4.0	10x4.4
T2	[mm]	5/16-24	5/16-24	5/16-24	5/16-24	5/16-24
D2	[mm]	φ18	φ20	φ25	φ28	φ35
Key way N2	[mm]	6.0x3.0	6.0x3.0	8.0x4.0	8.0x4.0	10x4.4
D3	[mm]	φ40	φ45	φ50	φ55	φ75
D4	[Inch]	φ60	φ70	φ70	φ80	φ110
D5	[mm]	φ75	φ85	φ85	φ95	φ130
T3	[mm]	M6x10	M8x12	M8x12	M8x12	M10x16
E1	[mm]	117.1	123.4	126.5	134.1	193.8
E2	[mm]	44.7	45.5	47.5	46.7	78.2
E3	[Inch]	0.75	0.75	0.75	0.75	1.19
Key way N3	[Inch]	3/16x3/32	3/16x3/32	3/16x3/32	3/16x3/32	1/8x1/4
V1 ~ V10	Motor attachment dimensions are made to fit your servo motor.					